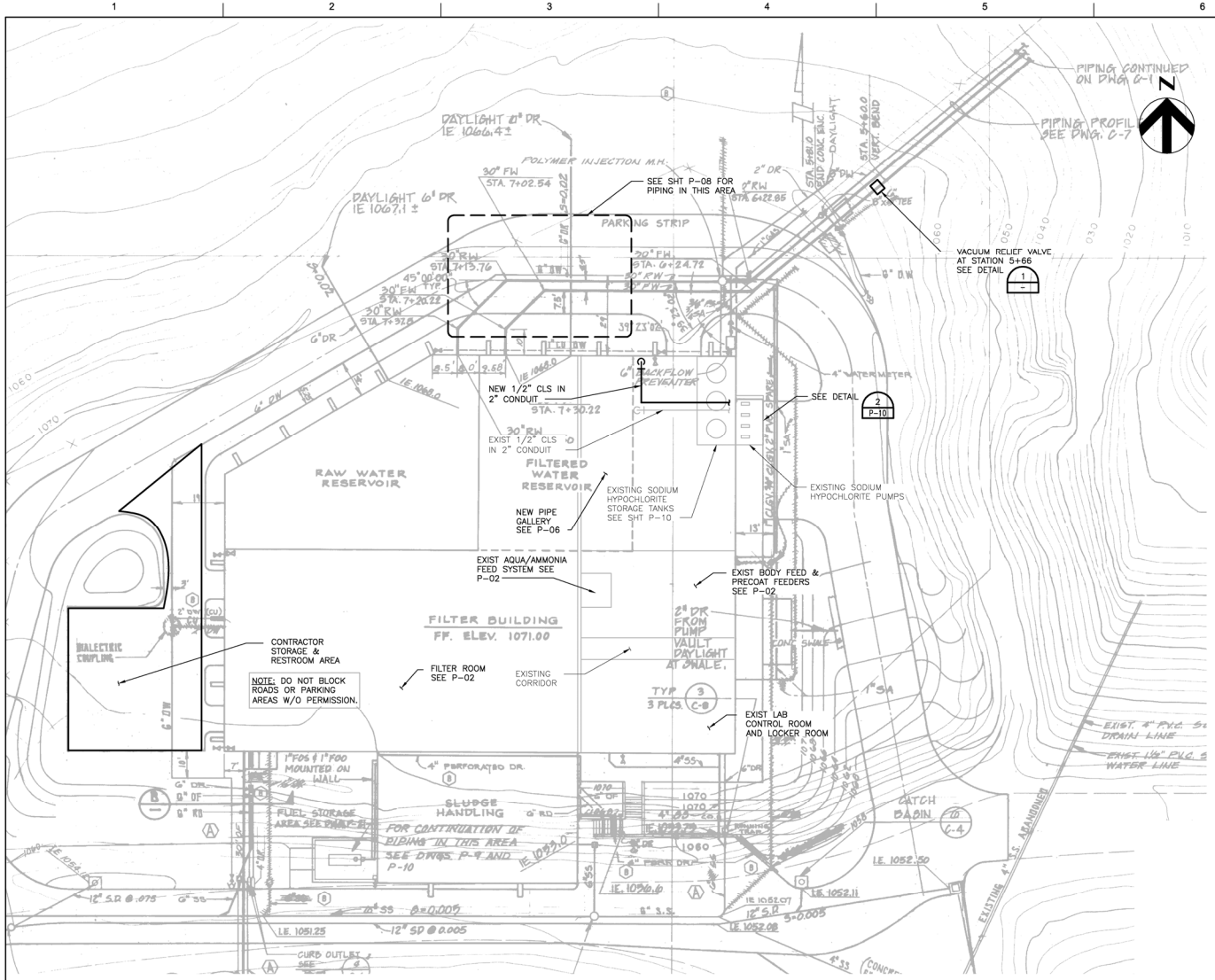

PLAN
1" = 20'

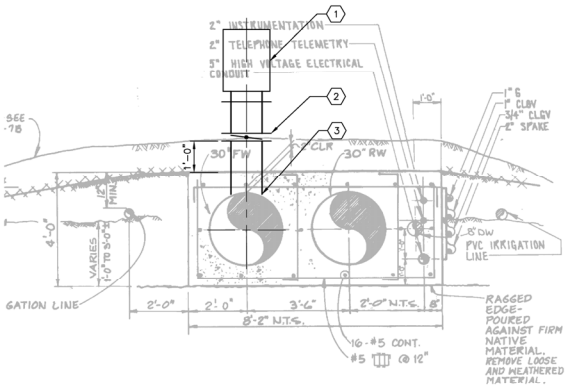

LIST OF MATERIALS	
ITEM	DESCRIPTION
1	VACUUM-RELIEF VALVE, CONTROLLED VENTING, VENT-O-MAT SERIES RBX-B, 4-INCH.
2	BUTTERFLY VALVE, FLANGED, 4-INCH. INSTALL ABOVE GRADE.
3	4-INCH FLANGED OUTLET WITH COLLAR, PER LVMWD STD. PW-131

NOTES:

1. CHIP CONCRETE FOR PIPE ACCESS. PROTECT/PRESERVE REBAR AND PIPE.
2. PIPE WALL THICKNESS IS ONLY 1/8-INCH. PROCEED WITH CARE.
3. PATCH/RESTORE CONCRETE UPON COMPLETION.
4. PROVIDE CONCRETE PAD AND COVER, PER LVMWD STD. PW-115.

DETAIL
1/2" = 1'-0"

RECORD DRAWINGS

LAS VIRGENES MUNICIPAL WATER DISTRICT

Westlake Filtration Plant Expansion

KEY PLAN AND YARD PIPING MODIFICATIONS

09956

FILENAME 236591-00C-01.DWG
SCALE AS NOTED
SHEET C-01