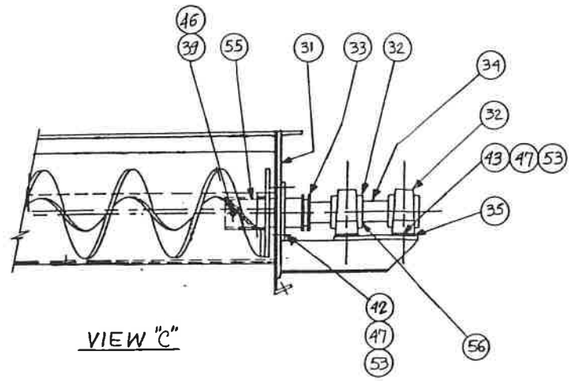

VIEW "C"

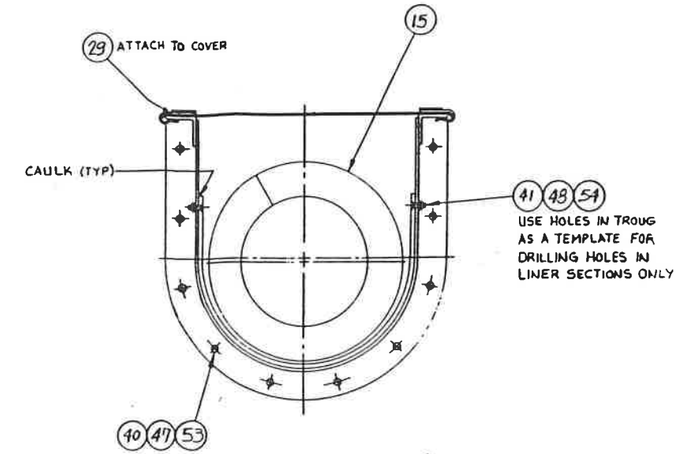

SECTION "A"-"A"

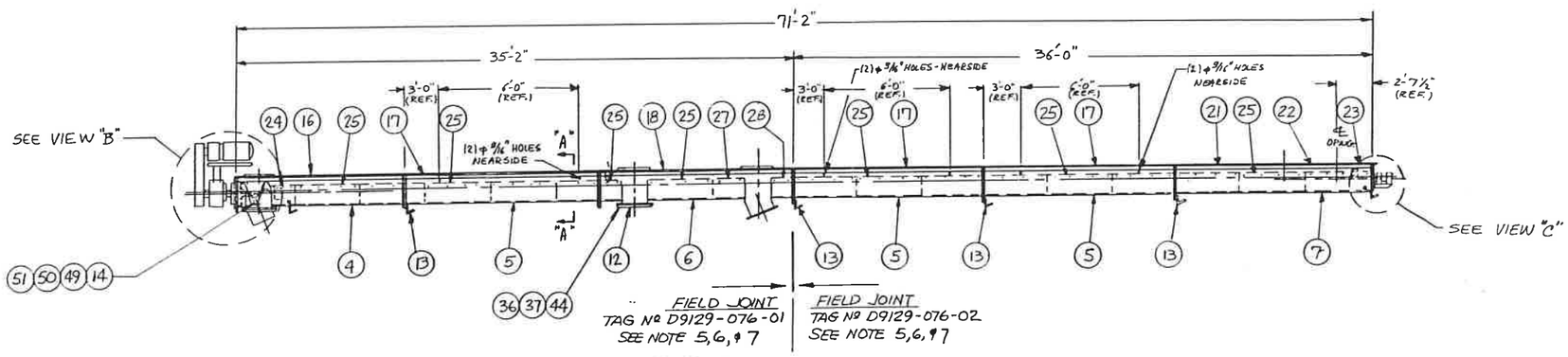

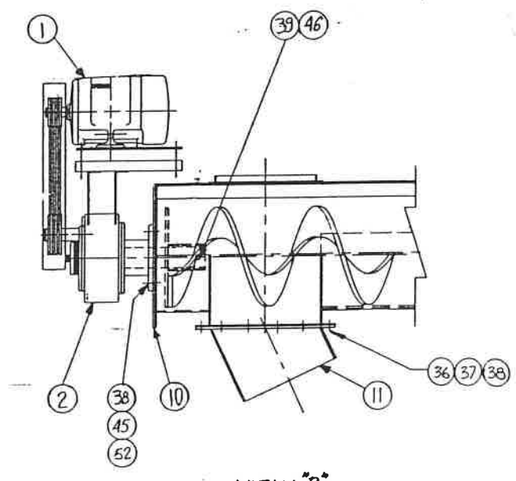

VIEW "B"

NOTES

1. USE ANTI-SEIZE ON ALL THREADS AND DRIVE SHAFT.
2. CAULK ALL BOLTED SEAMS WITH G.E. SILPRUF WEATHER-PROOFING SEALANT, COLOR ALUM/GRAY, P/N SCS2009, OR EQUAL.
3. TO PREVENT PERMANENT BENDS AT LIFT POINTS, SHAFTLESS AUGERS SHOULD BE LIFTED BY A PIPE IN THE CENTER OF THE AUGER WITH A LENGTH EQUAL TO THE LIFTED PART.
4. ASSEMBLE CONVEYOR AS SHOWN. SEE A-3009 FOR ALIGNMENT PROCEDURE OF TROUGH SECTION. VERIFY DIMENSIONS AFTER ASSEMBLY.
5. DISASSEMBLE AT THIS POINT FOR SHIPMENT. BAG AND TAG HARDWARE. COVER ALL OPENINGS WITH 1/2" PLYWOOD, PARTICLE BOARD, OR EQUAL. WIRE TO CONVEYOR. PROTECT ALL EXTERNAL THREADS TO PREVENT DAMAGE DURING SHIPMENT. TAG TROUGH SECTIONS AS SHOWN.
6. CUT AUGER AT THIS POINT. REMOVE PAINT 3" FROM SPLICE. PREPARE FOR FIELD WELDING PER A-3003. SHIP AUGER SECTIONS IN TROUGH SECTIONS.
7. IF LINER OVERLAPS FIELD JOINT, DISASSEMBLE SO LEAST AMOUNT OF LINER OVERHANGS. BAG AND TAG HARDWARE.
8. REFERENCE FIELD ASSEMBLY DRAWING: 9129-104.

REV.	DATE	BY	CHK	APPR	REVISIONS
–	6/9/92	HL			—

THIS DOCUMENT AND ITS CONTENTS ARE THE PROPERTY OF PURAC ENGINEERING, INC. AND MUST NOT BE COPIED, REPRODUCED, TRANSMITTED OR DISCLOSED TO ANY THIRD PARTY WITHOUT THE CONSENT OF PURAC ENGINEERING, INC., CONTRAVENTION WILL BE PROSECUTED.

SCALE: NONE

TOLERANCE: EXCEPT AS SPECIFIED NORMAL: ± 1/16", HOLES ± NOT TO BE ACCUMULATIVE

REFERENCE

PURAC

PURAC ENGINEERING, INC.
5301 LIMESTONE ROAD, SUITE 126
WILMINGTON, DELAWARE 19808
(302) 239-9431 FAX (302) 239-9085

SHAFTLESS SCREW CONVEYOR
(618") 2-C-104
SHOP ASSEMBLY

SIZE: D | DRAWING NO. 9129-076 | REV. –

SIZE D | DRAWING NO. 9129-076 | REV. 1

REF. 2-C 4

REV.	CODE	BY	DATE	CHK	DATE	APPR	DATE	REV.	CODE	BY	DATE	CHK	DATE	APPR	DATE
DRWG ISSUE		ML	6/77					E							
A		EF	8/7					F							
B								G							
C								H							
D								J							

PURAC ENGINEERING, INC.

PARTS LIST

PAGE: 1 REV A

PROJ. NO. 9129

2-C-104

PART NO. D9129-076

P/L REVISIONS

ASSEMBLY DRAWING: D9129-076

LINE	REFERENCE NO.	TOTAL QUANTITY	DESCRIPTION	DWG SIZE	ENGINEERING PART NUMBER	DWG REV	MAT'L SPEC	SOURCE	NOTES
A	1	1	SPECIFICATION DWG. ELECTRIC MOTOR	B	9129-049				
B									
C	2	1	SPECIFICATION DWG. GEAR REDUCER	B	9129-071				
D									
E	3								
F									
G	4	1	ϕ18" TROUGH SECTION - DRIVE	C	9129-147		A36		
H									
J	5	3	ϕ18" TROUGH SECTION	C	6016		A36		
K									
L	6	1	ϕ18" TROUGH SECTION W/2 OUTLETS	C	9129-146		A36		
M									
A N	7	1	ϕ18" TROUGH SECTION - TAIL	C	9129-148	A	A36		
P									
R	8								

REF. 2-C-104

P/L REVISIONS	REV.	CODE	BY	DATE	CHK	DATE	APPR	DATE	REV.	CODE	BY	DATE	CHK	DATE	APPR	DATE
	DRTG ISSUE		ML	6/27					E							
	A								F							
	B								G							
	C								H							
	D								J							

PURAC ENGINEERING, INC.

PARTS LIST

PAGE: 2 REV

PROJ. NO. 9129

PART NO. D9129 - 076

ASSEMBLY DRAWING: D9129-076

LINE	REFERENCE NO.	TOTAL QUANTITY	DESCRIPTION	DWG SIZE	ENGINEERING PART NUMBER	DWG REV	MAT'L SPEC	SOURCE	NOTES
A	9								
B									
C	10	1	ϕ 18" END PLATE - DRIVE	B	6040		A36		
D									
E	11	1	OUTLET CHUTE	B	9129-282		A36		
F									
G	12	1	ϕ18" COVER PLATE	B	9129-234		A36		
H									
J	13	4	ϕ 18" SUPPORTING FOOT	B	9129-283		A36		
K									
L	14		PLUG CHUTE LID		9129-357		A36		
M									
N	15	1	ϕ 18" AUGER W.A.	B	9129-155		8620		
P									
R	16	1	ϕ 18" SEMI FLANGE COVER	B	6033		A36		

REF. 2-C-104

P/L REVISIONS	REV.	CODE	BY	DATE	CHK	DATE	APPR	DATE	REV.	CODE	BY	DATE	CHK	DATE	APPR	DATE
	DRG ISSUE		ML	6/22					E							
	A		EF	8/14					F							
	B								G							
	C								H							
	D								J							

ASSEMBLY DRAWING: D9129-076

TOTAL QUANTITY

PURAC ENGINEERING, INC.

PARTS LIST

PAGE: 3 REV A

PROJ. NO. 9129

PART NO. D9129-076

	LINE	REFERENCE NO.				TOTAL QUANTITY	DESCRIPTION	DWG SIZE	ENGINEERING PART NUMBER	DWG REV	MAT'L SPEC	SOURCE	NOTES
	A	17				3	ϕ18" SEMI FLANGE COVER	B	6027		A36		
	B												
	C	18				1	ϕ18" SEMI FLANGE COVER	B	9129-149		A36		
	D												
	E	19											
	F												
	G	20											
	H												
A	J	21				1	ϕ18" SEMI FLANGE COVER	B	9129-150	A	A36		
	K												
A	L	22				1	ϕ18" SEMI FLANGE COVER	B	9129-151	A	A36		
	M												
	N	23				1	ϕ18" SEMI FLANGE COVER	B	9129-152		A36		
	P												
	R	24				1	ϕ18" TROUGH LINER	A	9129-390		XYLETHON		

REF. - Z-C-104

P/L REVISIONS	REV.	CODE	BY	DATE	CHK	DATE	APPR	DATE	REV.	CODE	BY	DATE	CHK	DATE	APPR	DATE
	DRIG ISSUE		ML	6/22					E							
	A								F							
	B								G							
	C								H							
	D								J							

ASSEMBLY DRAWING: D9129 - 076

PURAC ENGINEERING, INC.

PARTS LIST

PAGE: 4 REV

PROJ. NO. 9129

PART NO. D9129 - 076

LINE	REFERENCE NO.				TOTAL QUANTITY	DESCRIPTION	DWG SIZE	ENGINEERING PART NUMBER	DWG REV	MAT'L SPEC	SOURCE	NOTES
A	25				15	ϕ 18" TROUGH LINER	A	6095		XYLEMHOW		
B												
C	26											
D												
E	27				1	~ " ~	A	9129 - 391		- " -		
F												
G	28				1	~ " ~	A	9129 - 392		- " -		
H												
J	29				AR	ADHESIVE BACKED CLOSED CELL FOAM 2" x 1/8" THK						
K												
L	30											
M												
N	31				1	ϕ 18" END PLATE - TAIL	C	6052		A36		
P												
R	32				2	TAIL BEARING	B	4003				

REF. 2-G104

P/L REVISIONS	REV.	CODE	BY	DATE	CHK	DATE	APPR	DATE	REV.	CODE	BY	DATE	CHK	DATE	APPR	DATE
	DRIG ISSUE	'	ML	6/22					E							
	A								F							
	B								G							
	C								H							
	D								J							

ASSEMBLY DRAWING: D9129-076

PURAC ENGINEERING, INC.

PARTS LIST

PAGE: 5 REV

PROJ. NO. 9129

PART NO. D9129-076

LINE	REFERENCE NO.				TOTAL QUANTITY	DESCRIPTION	DWG SIZE	ENGINEERING PART NUMBER	DWG REV	MAT'L SPEC	SOURCE	NOTES
A	33				1	PACKING GLAND SEAL	B	4004				
B												
C	34				1	ϕ 2 7/16" TAIL SHAFT	B	6099		1045		
D												
E	35				2	1/4" SHIM PACK				18-8 S.S.		
F												
G	36				40	1/2-13 UNC x 1 1/2" LG HEX. HD. BOLT				ZINC PLATED		
H												
J	37				40	1/2-13 HEX. NUT				ZINC PLATED		
K												
L	38				4	3/4" x 2 3/4" LG BOLT HH				18-8 SS		
M												
N	39				4	7/8" x [illegible] LG BOLT HH				18-8 SS		
P												
R	40				70	5/8" x 2" LG BOLT HH				ZINC PLATED		

REF. 2-C-.. r

P/L REVISIONS	REV	CODE	BY	DATE	CHK	DATE	APPR	DATE	REV	CODE	BY	DATE	CHK	DATE	APPR	DATE
	DRTG ISSUE		ML	1/22					E					↓		
	A								F							
	B								G							
	C								H							
	D								J							

PURAC ENGINEERING, INC.

PARTS LIST

PAGE: 6 REV

PROJ. NO. 9129

PART NO. D9129-076

ASSEMBLY DRAWING: D9129-076

LINE	REFERENCE NO.				TOTAL QUANTITY	DESCRIPTION	DWG SIZE	ENGINEERING PART NUMBER	DWG REV	MAT'L SPEC	SOURCE	NOTES
A	41				136	5/16" x 1 1/4" LG FH MACHINE SCREW				316 SS		
B												
C	42				4	5/8" x 2 1/4" LG BOLT HH				18-8SS		
D												
E	43				4	5/8" x 3 1/2" LG. BOLT HH				18-8SS		
F												
G	44				40	1/2 NOM LOCKWASHER				ZINC PLATED		
H												
J	45				4	3/4" N				18-8SS		
K												
L	46				4	7/8" LN				18-8SS		
M												
N	47				78	5/8" N				70 PCS - ZINC PLATED 8 PCS - 18-8SS		
P												
R	48				136	5/16" N				316 SS		

REF. 2-C 7

P/L REVISIONS	REV.	CODE	BY	DATE	CHK	DATE	APPR	DATE	REV.	CODE	BY	DATE	CHK	DATE	APPR	DATE
	DWG ISSUE		ML	6/22					E							
	A								F							
	B								G							
	C								H							
	D								J							

ASSEMBLY DRAWING: D9129-076

PURAC ENGINEERING, INC.

PARTS LIST

PAGE: 7 REV

PROJ. NO. 9129

PART NO. D9129-076

LINE	REFERENCE NO.	TOTAL QUANTITY	DESCRIPTION	DWG SIZE	ENGINEERING PART NUMBER	DWG REV	MAT'L SPEC	SOURCE	NOTES
A	49	3	1/4-20UNC x 1" LG. HEX. HD. BOLT				ZINC PLATED		
B									
C	50	3	1/4-20 HEX. NUT				ZINC PLATED		
D									
E	51	3	1/4 NOM. LOCKWASHER				ZINC PLATED		
F									
G	52	4	3/4" LW				18-8 SS		
H									
J	53	78	5/8" LW				70-ZINC PLATED 30-18-8 SS		
K									
L	54	136	5/16" LW				316 SS		
M									
N	55	1	BUSHING.	A	6100		A36		
P									
R	56	2	RETAINING RING		5100-243				

SIZE D | DWG NO. D9129-104 | REV. B

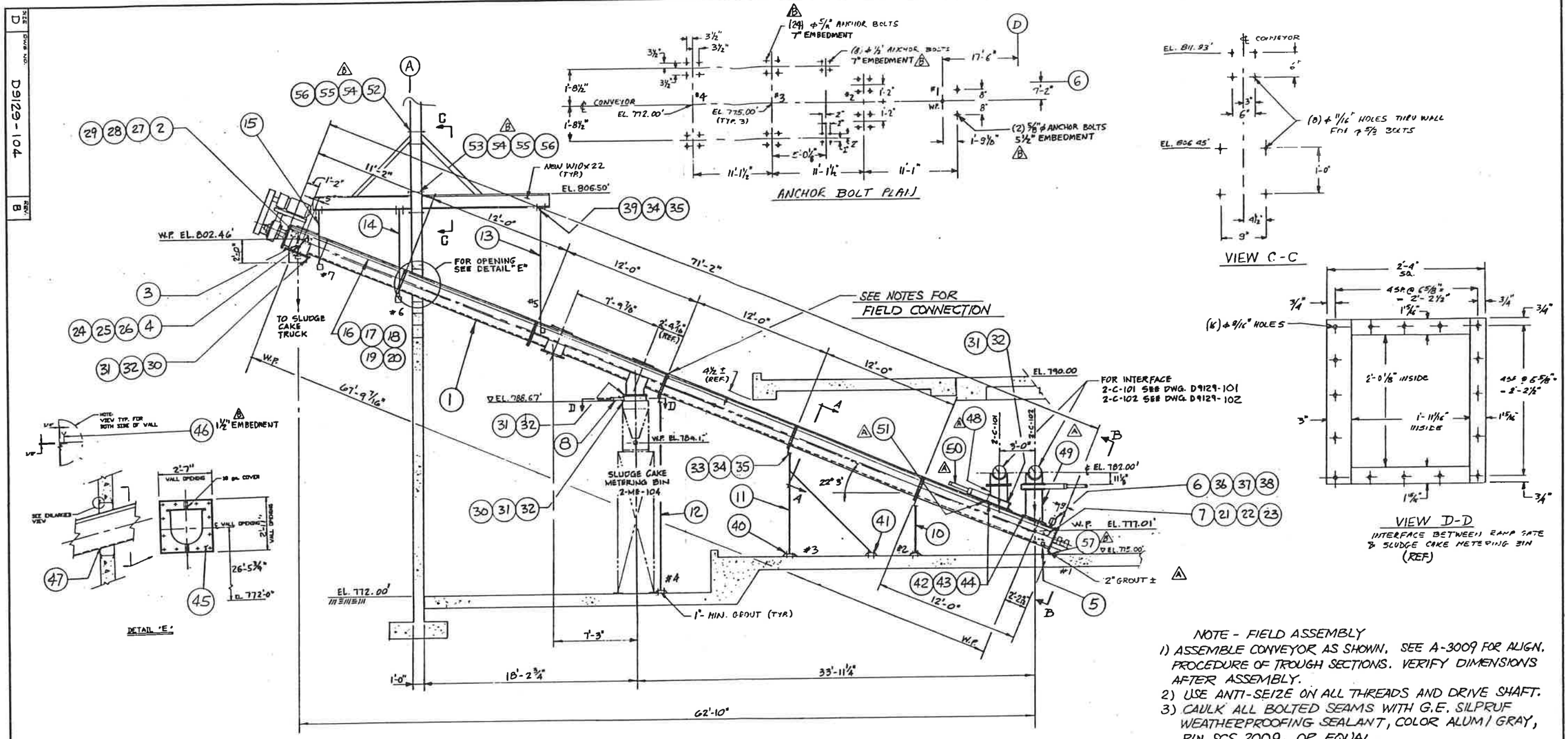

ELEVATION VIEW M 004

NOTE - FIELD ASSEMBLY

1) ASSEMBLE CONVEYOR AS SHOWN. SEE A-3009 FOR ALIGN. PROCEDURE OF TROUGH SECTIONS. VERIFY DIMENSIONS AFTER ASSEMBLY.
2) USE ANTI-SEIZE ON ALL THREADS AND DRIVE SHAFT.
3) CAULK ALL BOLTED SEAMS WITH G.E. SILPRUF WEATHERPROOFING SEALANT, COLOR ALUM/GRAY, P/N SCS 2009, OR EQUAL.

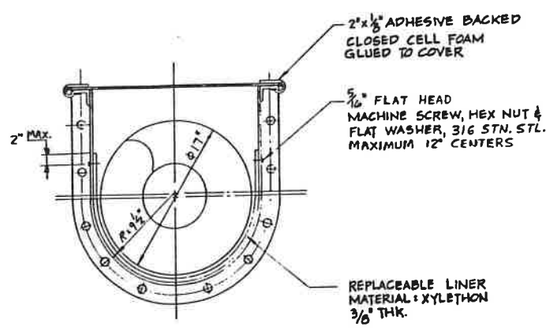

SECTION "A-A" (REF.)

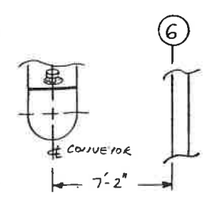

VIEW B-B

FIELD ASSEMBLY

THIS DOCUMENT AND IT'S CONTENTS ARE THE PROPERTY OF PURAC ENGINEERING AND MUST NOT BE COPIED, REPRODUCED, TRANSMITTED OR DISCLOSED TO ANY THIRD PARTY WITHOUT THE CONSENT OF PURAC ENGINEERING INC., CONTRAVENTION WILL BE PROSECUTED.

TOLERANCES UNLESS OTHERWISE SPECIFIED
ANGLES ± 1°
FRACTIONS ± 1/32"
.XX ± .01
.XXX ± .005

REV.	BY	DATE	REVISIONS	ISSUE DATE
B	BE	9-3-92	ADDED ANCHOR BOLT EMBEDMENT ADDED ITEM # 52 thru 57	
A	JF	8-7-92	ADDED ITEM # 48, 49, 50, & 51 REVISED ITEM # 9	

SCALE NONE

PURAC
PURAC ENGINEERING, INC.
5301 LIMESTONE ROAD, SUITE 128
WILMINGTON, DELAWARE 19808
(302) 239-9431 FAX (302) 239-9085

APPROVED | CHECKED | DRAWN

LAS VIRGENES, CALIFORNIA
LAS VIRGENES MWD

SHAFTLESS SCREW CONVEYOR
(ϕ 18") 2-C-104
DEWATERING BUILDING

PROJECT NO.	DRAWING NO.	REV.
9129	D9129-104	B

B/M REVISIONS	ASSEMBLY DRAWING					TOTAL QUANTITY
		9129-104				

REV.	CODE	BY	DATE	CHK	DATE	APPR	DATE	REV.	CODE	BY	DATE	CHK	DATE	APPR	DATE
ORIG ISSUE		[illegible]	7/28					E							
A		DSF	8/20/92					F							
B								G							
C								H							
D								J							

PURAC ENGINEERING, INC.

BILL OF MATERIAL

PROJECT NAME: 18 ϕ SCREW CONVEYOR 2-C-104

PAGE: 1 REV A

PROJ. NO. 9129

	LINE	REFERENCE NO.				TOTAL QUANTITY	DESCRIPTION	DWG SIZE	ENGINEERING PART NUMBER	DWG REV	MAT'L SPEC	SOURCE	NOTES
	A	1				1	18 ϕ SCREW CONVEYOR 2-C-104	D	9129-076				
	B												
A	C	2				1	SAFETY PULL CORD SWITCH PCR2S SINGLE END RIGHT 2SWS	B	9129-043	A			
	D												
A	E	3				1	PLUG CHUTE PROBE MODEL 20-39	B	9129-050	A			
	F												
A	G	4				1	PLUG CHUTE - CONTROL UNIT MODEL 20-38	B	9129-050	A			
	H												
	J	5				1	2" DRAIN VALVE W/PLUG	B	9129-051				
	K												
A	L	6				1	MOTION FAILURE ALARM MSP-12	B	9129-052	A			
	M												
A	N	7				1	MOTION FAILURE ALARM AMPLIFIER	B	9129-052	A			
	P												
	R												

B/M REVISIONS	REV.	CODE	BY	DATE	CHK	DATE	APPR	DATE	REV.	CODE	BY	DATE	CHK	DATE	APPR	DATE
	ORIG ISSUE		JF	7/28					E							
	A		DSF	8/21/92					F							
	B								G							
	C								H							
	D								J							

ASSEMBLY DRAWING: D9129 - 104

PURAC ENGINEERING, INC.

BILL OF MATERIAL

PAGE: 2 REV A

PROJ. NO. 9129

PROJECT NAME: 18 ϕ SCREW CONVEYOR 2-C-104

	LINE	REFERENCE NO.	TOTAL QUANTITY	DESCRIPTION	DWG SIZE	ENGINEERING PART NUMBER	DWG REV	MAT'L SPEC	SOURCE	NOTES
	A	8	1	RAMP VALVE MODEL- PEBCO D1654		02-V-60				
	B									
A	C	9								
	D									
	E	10	1	SUPPORT		9205-S1 DET. 4 2C104-2				
	F									
	G	11	1	SUPPORT		9205-S1 DET. 4 9205-S7 DET. 3				
	H					2C104-3				
	J	12	1	SUPPORT		9205-S1 DET. 4 2C104-4				
	K									
	L	13	1	SUPPORT		9205-S8-DET.4 2C104-5				
	M									
	N	14	1	SUPPORT		9205-S5-DET.1 2C104-6				
	P									
	R	15	1	SUPPORT		9205-S5-DET.1 2C104-7				

B/M REVISIONS	ASSEMBLY DRAWING					TOTAL QUANTITY	REV.	CODE	BY	DATE	CHK	DATE	APPR	DATE	REV.	CODE	BY	DATE	CHK	DATE	APPR	DATE
	D9129-104						ORIG ISSUE		A	7/28					E							
							A		E	8/7/92					F							
							B								G							
							C								H							
							D								J							

PURAC ENGINEERING, INC.

BILL OF MATERIAL

PAGE: 3 REV A

PROJ. NO. 9129

PROJECT NAME: 18 ϕ SCREW CONVEYOR 2-C-104

	LINE	REFERENCE NO.					DESCRIPTION	DWG SIZE	ENGINEERING PART NUMBER	DWG REV	MAT'L SPEC	SOURCE	NOTES
	A	16				11	1/2" EYEBOLT - 5" LG				18-8 SST		
	B												
	C	17				22	1/2-13 HEX NUT				18-8 SST		
	D												
	E	18				11	1/2 NOM. LOCKWASHER				18-8 SST		
	F												
A	G	19				4	CABLE END CLAMP				18-8 SST		
	H												
A	J	20				72'	3/32" AIRCRAFT CABLE						
	K						7x7 PREFORMED, GALVANIZED CABLE W/ORANGE VINYL COATING						
	L												
	M												
	N												
	P												
	R												

B/M REVISIONS	REV.	CODE	BY	DATE	CHK	DATE	APPR	DATE	REV.	CODE	BY	DATE	CHK	DATE	APPR	DATE
	ORIG ISSUE		#	7/28					E							
	A								F							
	B								G							
	C								H							
	D								J							

ASSEMBLY DRAWING: 9129-104

PURAC ENGINEERING, INC.

BILL OF MATERIAL

PAGE: 4 REV –

PROJ. NO. 9129

PROJECT NAME: 18 ϕ SCREW CONVEYOR 2-C-104

LINE	REFERENCE NO.				TOTAL QUANTITY	DESCRIPTION	DWG SIZE	ENGINEERING PART NUMBER	DWG REV	MAT'L SPEC	SOURCE	NOTES
A	21				4	*8-32UNC x 3¾ LG, HEX. HD BOLT				ZINC PLATED		
B												
C	22				4	*8-32 HEX NUT						
D												
E	23				4	*8-NOM LOCKWASHER						
F												
G	24				4	¼-20 UNC x ¾ LG, HEX. HD. BOLT						
H												
J	25				4	¼-20UNC HEX NUT						
K												
L	26				4	¼ NOM LOCKWASHER						
M												
N	27				4	⅜-16 UNC x 1" LG HEX. HD. BOLT						
P												
R	28				4	⅜-16 HEX NUT						

B/M REVISIONS	REV.	CODE	BY	DATE	CHK	DATE	APPR	DATE	REV.	CODE	BY	DATE	CHK	DATE	APPR	DATE
	ORIG ISSUE		JF	7/28					E							
	A								F							
	B								G							
	C								H							
	D								J							

ASSEMBLY DRAWING: 9129-104

PURAC ENGINEERING, INC.

BILL OF MATERIAL

PAGE: 5 REV -

PROJ. NO. 9129

PROJECT NAME: 18 ϕ SCREW CONVEYOR 2-C-104

LINE	REFERENCE NO.	TOTAL QUANTITY	DESCRIPTION	DWG SIZE	ENGINEERING PART NUMBER	DWG REV	MAT'L SPEC	SOURCE	NOTES
A	29	4	3/8 NOM LOCKWASHER				ZINC PLATED		
B									
C	30	36	1/2-13 UNC×1 1/2 LG, HEX. HD. BOLT				ZINC PLATED		
D									
E	31	56	1/2-13 HEX NUT				ZINC PLATED		
F									
G	32	56	1/2 NOM. LOCKWASHER				ZINC PLATED		
H									
J	33	12	5/8-11 UNC×1 3/4 LG, HEX HD BOLT				ZINC PLATED		
K									
L	34	24	5/8-11 HEX NUT				ZINC PLATED		
M									
N	35	24	5/8 NOM. LOCKWASHER				ZINC PLATED		
P									
R									

B/M REVISIONS	REV.	CODE	BY	DATE	CHK	DATE	APPR	DATE	REV.	CODE	BY	DATE	CHK	DATE	APPR	DATE
	ORIG ISSUE		JF	7/23					E							
	A		BE	9/14/92					F							
	B								G							
	C								H							
	D								J							

ASSEMBLY DRAWING: 9129-104

PURAC ENGINEERING, INC.

BILL OF MATERIAL

PAGE: 6 REV A

PROJ. NO. 9129

PROJECT NAME: 18 ϕ SCREW CONVEYOR 2-C-104

	LINE	REFERENCE NO.				TOTAL QUANTITY	DESCRIPTION	DWG SIZE	ENGINEERING PART NUMBER	DWG REV	MAT'L SPEC	SOURCE	NOTES
	A	36				4	1/4-20UNC x 3/4LG, HEX HD. BOLT				18-8 SST		
	B												
	C	37				4	1/4-20 HEX NUT				18-8 SST		
	D												
	E	38				4	1/4 NOM. LOCKWASHER				18-8 SST		
	F												
	G	39				12	5/8 UNC x 4 1/2 HEX HD BOLT				ZINC PLATED		
	H												
A	J	40				8	1/2" REDHEAD ANCHOR BOLTS x 7"LG.				ZINC PLATED		
	K												
A	L	41				24	5/8" REDHEAD ANCHOR BOLTS x 7"LG.				ZINC PLATED		
	M												
	N												
	P												
	R												

B/M REVISIONS	REV.	CODE	BY	DATE	CHK	DATE	APPR	DATE	REV.	CODE	BY	DATE	CHK	DATE	APPR	DATE
	ORIG ISSUE		EF	7/28					E							
	A		EF	8/7/92					F							
	B		BE	8/10/92					G							
	C								H							
	D								J							

ASSEMBLY DRAWING: D9129-104

PURAC ENGINEERING, INC.

BILL OF MATERIAL

PROJECT NAME: 18 ϕ SCREW CONVEYOR 2-C-104

PAGE: 7 | REV B | PROJ. NO. 9129

	LINE	REFERENCE NO.	TOTAL QUANTITY	DESCRIPTION	DWG SIZE	ENGINEERING PART NUMBER	DWG REV	MAT'L SPEC	SOURCE	NOTES
	A	42	36	1/2-13 UNC x 1 1/2 LG, HEX HD. BOLT				18-8 SST		
	B									
	C	43	36	1/2-13 HEX NUT				18-8 SST		
	D									
	E	44	36	1/2 NOM. LOCKWASHER				18-8 SST		
	F									
	G	45	1	FRAME & COVER	C	9129-335-A				
	H									
B	J	46	16	1/4 ANCHOR BOLT, REDHEAD x 2 1/4" LG				ZINC PLATED		
	K									
	L	47	AR	ADHESIVE BACKED CLOSED CELL FOAM 2" x 1/8" THK	-		-			
	M									
A	N	48	1	CHUTE - FROM 2-C-101 TO 2-C104	C	9129-421				
	P									
A	R	49	1	CHUTE - FROM 2-C-102 TO 2-C-104	C	9129-422				

REV.	CODE	BY	DATE	CHK	DATE	APPR	DATE	REV.	CODE	BY	DATE	CHK	DATE	APPR	DATE
ORIG ISSUE		#	7/28					E							
A		#	8/7/92					F							
B		BE	9/3/92					G							
C		BE	9/14/92					H							
D								J							

PURAC ENGINEERING, INC.

BILL OF MATERIAL

PROJECT NAME: 18φ SCREW CONVEYOR 2-C-104

PAGE: 8 REV C

PROJ. NO. 9129

B/M REVISIONS

ASSEMBLY DRAWING: 9129-104

	LINE	REFERENCE NO.	TOTAL QUANTITY	DESCRIPTION	DWG SIZE	ENGINEERING PART NUMBER	DWG REV	MAT'L SPEC	SOURCE	NOTES
A	A	50	1	RAMP VALVE PEBCO D 1653		02-V-56				
	B									
A	C	51	1	SPACER PLATE	B	9129-438				
	D									
B	E	52	4	3/4"-10 UNC x 14 1/2" LG. HEX HD BOLT				ZINC PLATED		
	F									
B	G	53	4	3/4"-10 UNC x 15" LG. HEX HD BOLT				ZINC PLATED		
	H									
B	J	54	8	3/4"-10 HEX NUT				ZINC PLATED		
	K									
B	L	55	8	3/4" NOM. LOCK WASHER				ZINC PLATED		
	M									
B	N	56	8	3/4" NOM FLAT WASHER				ZINC PLATED		
	P									
C	R	57	2	5/8" REDHEAD ANCHOR BOLT x 8 1/2" LG				ZINC PLATED		