Drawings for RFE IV (Tapia) 1990 Volume V Filtration-Disinfection Addition, 1990

LAS VIRGENES MUNICIPAL
WATER DISTRICT
LOS ANGELES COUNTY

CONTRACT DOCUMENTS
FOR CONSTRUCTION OF

TRIUNFO COUNTY
SANITATION DISTRICT
VENTURA COUNTY

TAPIA WRF – REGIONAL FACILITIES EXPANSION IV

VOLUME V

FILTRATION /DISINFECTION ADDITION

JMM James M. Montgomery
Consulting Engineers, Inc.

Pasadena, California

04672

ORD DOCUMENT
CA 94526
By

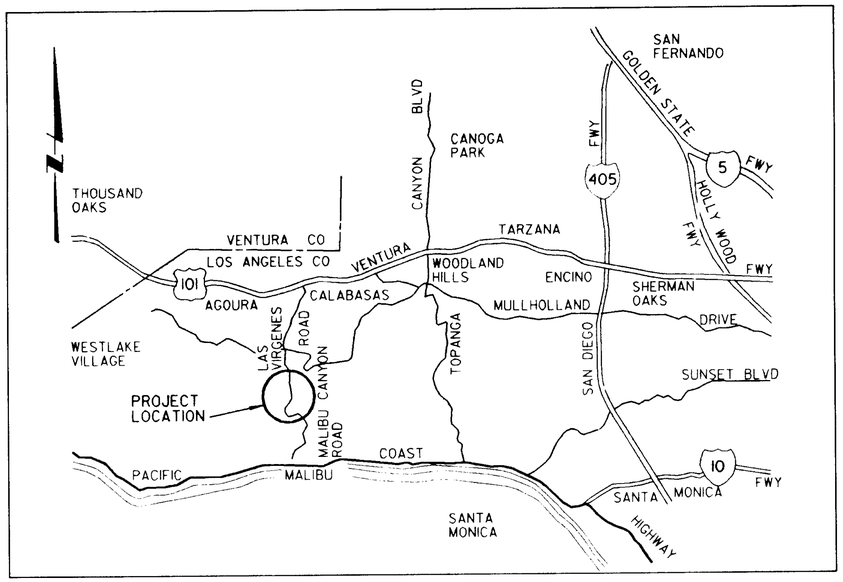

VICINITY MAP
NOT TO SCALE

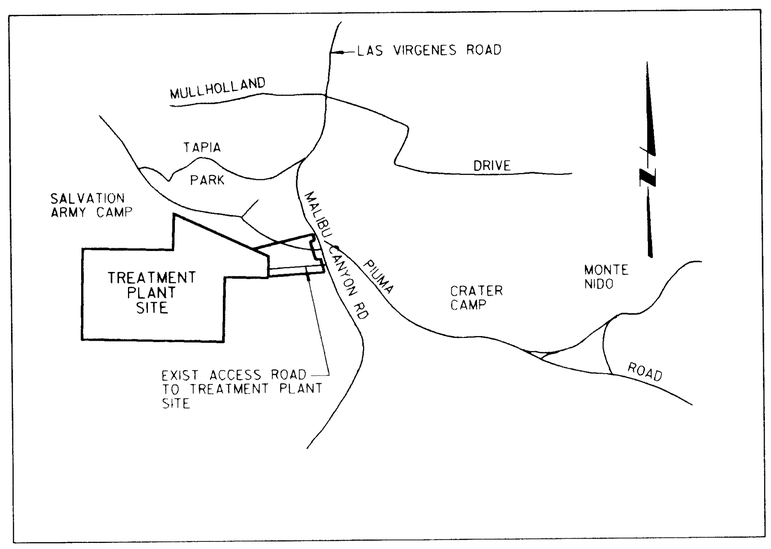

LOCATION MAP
NOT TO SCALE

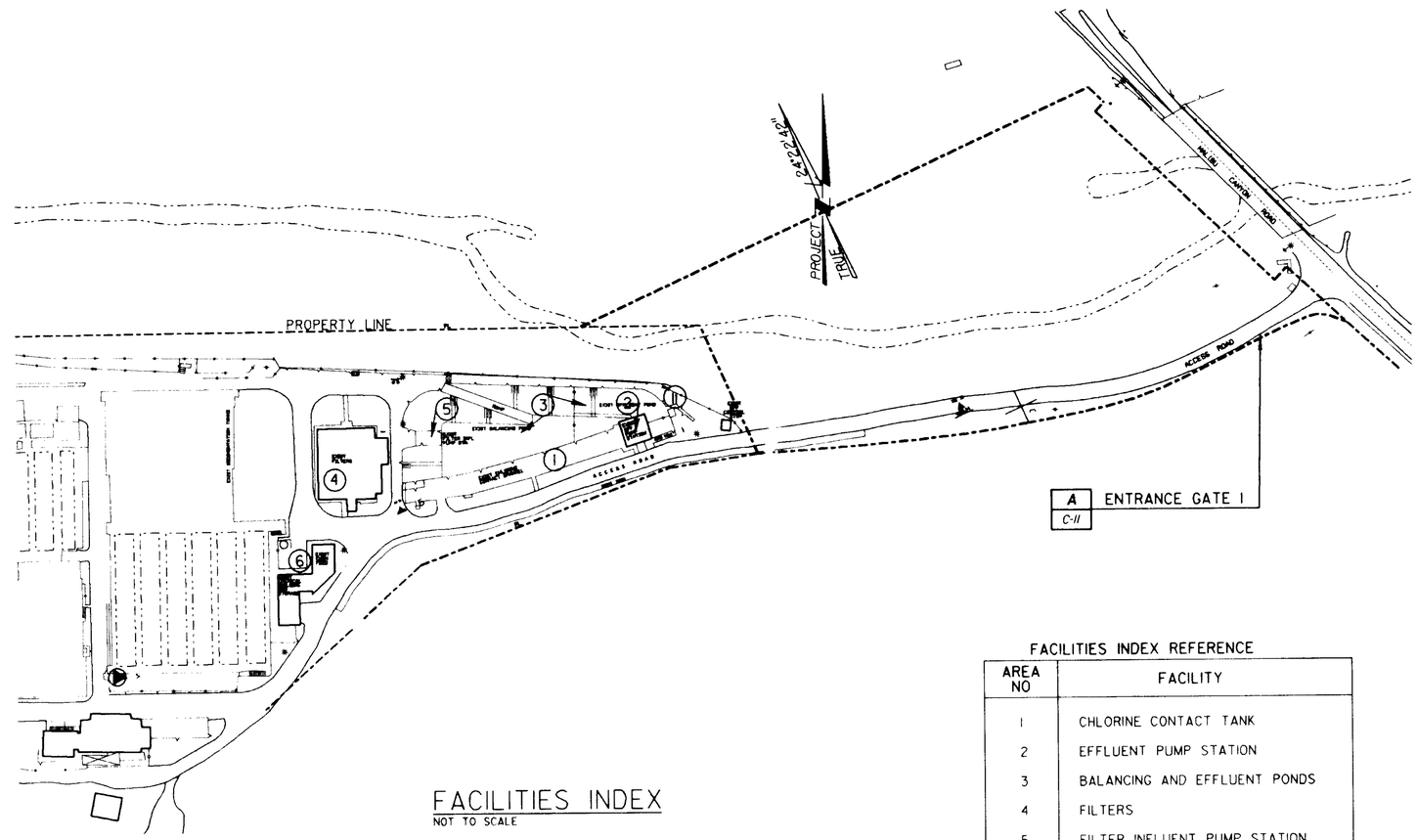

FACILITIES INDEX
NOT TO SCALE

FACILITIES INDEX REFERENCE

AREA NO	FACILITY
1	CHLORINE CONTACT TANK
2	EFFLUENT PUMP STATION
3	BALANCING AND EFFLUENT PONDS
4	FILTERS
5	FILTER INFLUENT PUMP STATION
6	CHEMICAL BUILDINGS
11	DRAINAGE PUMP STATION

08 12 94

04673

3-31-91

PROJECT RECORD DOCUMENT
C W Rosen Const Co
P O 4 Danville, CA 94526
DATE 2-16-94 By BEd

FILE No.

JOB No.

REV	DATE	BY	DESCRIPTION

SCALE: NONE

WARNING: 0 1/2 1 — IF THIS BAR DOES NOT MEASURE 1" THEN DRAWING IS NOT TO SCALE.

DESIGNED
DRAWN
CHECKED

SUBMITTED
PROJECT ENGINEER — R. C. E. NO. 41019 — DATE 11/26/90
JAMES M. MONTGOMERY CONSULTING ENGINEERS, INC. — R. C. E. NO. 33695 — DATE 11/26/90

JMM James M. Montgomery Consulting Engineers, Inc.
Pasadena, California

APPROVED — DATE
APPROVED — DATE

LAS VIRGENES MWD / TRIUNFO CSD
TAPIA WRF - REGIONAL FACILITIES EXPANSION IV
FILTRATION / DISINFECTION ADDITION

VICINITY MAP, LOCATION MAP AND FACILITIES INDEX

SHEET G-1 OF 110 SHEETS

LIST OF DRAWINGS

GENERAL

	COVER SHEET
G-1	VICINITY MAP, LOCATION MAP AND FACILITIES INDEX
G-2	LIST OF DRAWINGS
G-3	DESIGN CRITERIA
G-4	HYDRAULIC PROFILE
G-5	SYMBOLS
G-6	ABBREVIATIONS

CIVIL

C-1	SURVEY
C-2	SITE PLAN AND PAVING PLAN
C-3	YARD PIPING
C-4	GRADING
C-5	DEMOLITION PLAN
C-6	SECTIONS AND DETAILS
C-7	DETAILS
C-8	PIPING PROFILES
C-9	DETAILS
C-10	SECTIONS AND DETAIL
C-11	PLANS, PROFILE AND DETAIL
C-12	MALIBU CREEK

KD

ARCHITECTURAL

A-1	DETAILS
A-2	FLOOR PLAN, EXT. ELEVATIONS AND DETAILS CHEMICAL BUILDING MODIFICATIONS
1A-1	CHLORINE CONTACT TANK - DECK PLAN
1A-2	CHLORINE CONTACT TANK - EXTERIOR ELEVATIONS
1A-3	CHLORINE CONTACT TANK - SECTIONAL ELEVATIONS
4A-1	FILTERS - PLAN AND EXTERIOR ELEVATIONS

LANDSCAPE

L-1	LANDSCAPE PLAN
L-2	IRRIGATION PLAN
L-3	REVISED POINTS OF CONNECTIONS

STRUCTURAL

GS-1	GENERAL NOTES AND CONST. JOINT DETAILS
GS-2	STANDARD JOINT DETAILS
GS-3	STANDARD REINFORCEMENT DETAILS
GS-4	STANDARD MISCELLANEOUS DETAILS
GS-5	STANDARD METALWORK DETAILS
GS-6	STANDARD STOP GATES, WEIR PLATES AND SHIPS LADDER
1S-1	CHLORINE CONTACT TANK AND PONDS FOUNDATION PLAN-1
1S-2	CHLORINE CONTACT TANK AND PONDS FOUNDATION PLAN-2
1S-3	CHLORINE CONTACT TANK AND PONDS TOP PLAN-1
1S-4	CHLORINE CONTACT TANK AND PONDS TOP PLAN-2
1S-5	CHLORINE CONTACT TANK-INLET STRUCTURE SECTIONS-1
1S-6	CHLORINE CONTACT TANK-INLET STRUCTURE SECTIONS-2
1S-7	CHLORINE CONTACT TANK-EFFLUENT STRUCTURE SECTIONS-1
1S-8	CHLORINE CONTACT TANK-EFFLUENT STRUCTURE SECTIONS-2
1S-9	CHLORINE CONTACT TANK-EFFLUENT STRUCTURE SECTIONS-3
1S-10	CHLORINE CONTACT TANK-EFFLUENT STRUCTURE SECTIONS-4
1S-11	POND OVERFLOW SECTION-1
1S-12	EFFLUENT POND OVERFLOW SECTION-2
1S-13	CHLORINE CONTACT TANK EFFLUENT AND INLET STRUCTURES-SECTIONS AND DETAILS
1S-14	FILTER INFLUENT PUMP STATION RAMP SECTIONS AND TYPICAL DETAILS
1S-15	PONDS WALL SECTIONS
1S-16	CHLORINE CONTACT TANK AND POND OVERFLOW PARTIAL PLANS
4S-1	FILTERS-PLAN AT ELEV. 479.00 & FOUNDATION PLAN
4S-2	FILTERS-TOP AND SECTIONAL PLANS
4S-3	FILTERS SECTIONS AND DETAILS
4S-4	FILTERS TYPICAL CROSS SECTION
4S-5	FILTERS BULKHEAD AND PIPE GALLERY-STAIRWELL DETAILS
4S-6	FILTERS DEMOLITION PLANS AND SECTIONS
S-1	**EXPANSION MODIFICATIONS - I**
S-2	**EXPANSION MODIFICATIONS - II**
S-3	**EXPANSION MODIFICATIONS - III**

AD

MECHANICAL

M-1	PROCESS FLOW DIAGRAM
M-2	PIPING SCHEDULE
M-3	EQUIPMENT SCHEDULES
M-4	MECHANICAL DETAILS - 1
M-5	MECHANICAL DETAILS - 2
M-6	CHLORINE AND SULFUR DIOXIDE SCHEMATIC
M-7	**MECHANICAL DETAILS**
1M-1	CHLORINE CONTACT TANK-PLAN
1M-2	CHLORINE CONTACT TANK-WEST PLAN
1M-3	CHLORINE CONTACT TANK-EAST PLAN
1M-4	CHLORINE CONTACT TANK SECTIONS
2M-1	EFFLUENT PUMP STATION-PLAN AND SECTION
4M-1	FILTERS-PLAN AT UPPER LEVEL
4M-2	FILTERS-PLAN AT LOWER LEVEL
4M-3	FILTERS-SECTIONS
4M-4	FILTERS-AIR SCOUR SYSTEM
4M-5	FILTERS-DETAILS-1
4M-6	FILTERS-DETAILS-2
5M-1	FILTER INFLUENT PUMP STATION-PLAN AND SECTION
6M-1	CHEMICAL BUILDING-EXISTING PIPING
6M-2	CHEMICAL BUILDING-MODIFICATIONS
6M-3	CHEMICAL BUILDING-CAUSTIC SODA TANKS
6M-3(A)	CHEMICAL BUILDING-C SODA SCHEMATIC
11M-1	DRAINAGE PUMP STATION-PLAN AND SECTION

KD

ELECTRICAL

E-1	ELECTRICAL SYMBOLS
E-2	ELECTRICAL ABBREVIATIONS AND GENERAL NOTES
E-3	PLOT PLAN
E-4	SINGLE LINE DIAGRAM-1
E-5	SINGLE LINE DIAGRAM-2
E-6	SINGLE LINE DIAGRAM-3
E-7	SCHEMATIC DIAGRAM
E-8	STANDARD DETAILS-1
E-9	STANDARD DETAILS-2
E-10	CONDUIT AND DUCT BANK SCHEDULES
1E-1	CHLORINE CONTACT TANK MODIFICATIONS
2E-1	EFFLUENT PUMP STATION POWER CONTROL PLAN & EQUIPMENT ELEVATIONS
4E-1	FILTERS-UPPER LEVEL LIGHTING AND RECEPTACLES
4E-2	FILTERS-LOWER LEVEL LIGHTING AND RECEPTACLES
4E-3	FILTERS-UPPER LEVEL POWER AND CONTROL PLAN AND DETAILS
4E-4	FILTERS-LOWER LEVEL POWER AND CONTROL PLAN AND DETAILS
4E-5	FILTERS-UPPER LEVEL EXISTING LIGHTING MODIFICATIONS
4E-6	FILTERS-MODIFICATIONS
4E-7	PANEL FIXTURE SCHEDULES AND FILTER PARTIAL PLAN
5E-1	FILTER INFLUENT PUMP STATION
6E-1	CHEMICAL BUILDING POWER AND CONTROL PLAN
11E-1	DRAINAGE PUMP STATION-POWER AND CONTROL PLAN
12E-1	REPLACEMENT OF 300KVA TRANSFORMER TX-A

INSTRUMENTATION

I-1	INSTRUMENTATION SYMBOLS AND ABBREVIATIONS P&ID AND LOOP SYMBOLS-1
I-2	LOOP DIAGRAMS-1
I-3	LOOP DIAGRAMS-2
I-4	LOOP DIAGRAMS-3
I-5	FILTER CONSOLE DETAILS
I-6	LCB PANEL MODIFICATION DETAILS
I-7	FILTER AUTOMATIC CONTROL DIAGRAM MODIFICATIONS
I-8	FILTER BACKWASH SCHEMATIC 1
I-9	FILTER BACKWASH SCHEMATIC 2
I-10	TERMINAL BLOCK CONNECTIONS TO RTU'S

04674

08.24.94 C. O'Neal

PROJECT RECORD DOCUMENT
C W Roen Const Co.
P O 4 Danville, CA 94526
DATE 2-16-94 BY

REGISTERED PROFESSIONAL ENGINEER 3-31-91

FILE No.

JOB No.

REV	DATE	BY	DESCRIPTION
AD	2-16-94		As-Built

SCALE: NONE

WARNING 0 1/2 1 — IF THIS BAR DOES NOT MEASURE 1" THEN DRAWING IS NOT TO SCALE.

DESIGNED J. Pacer
DRAWN CAD
CHECKED J. Pacer

SUBMITTED Jose M. Pacer — PROJECT ENGINEER — 41019 R. C. E. NO. — 11/26/90 DATE
JAMES M. MONTGOMERY CONSULTING ENGINEERS, INC. — 33699 R. C. E. NO. — 11/26/90 DATE

JMM James M. Montgomery Consulting Engineers, Inc. Pasadena, California

APPROVED DISTRICT APPROVAL — DATE
APPROVED — DATE

LAS VIRGENES MWD / TRIUNFO CSD
TAPIA WRF - REGIONAL FACILITIES EXPANSION IV
FILTRATION / DISINFECTION ADDITION

LIST OF DRAWINGS

SHEET G-2 OF 110 SHEETS

DESIGN CRITERIA

ITEM	UNITS	EXISTING	PROPOSED
PLANT FLOW RATES			
Average	MGD	10.0	16.1
Dry Peak	MGD	17.5	28.2
Wet Peak	MGD	22.3	36.0
TERTIARY TREATMENT FACILITIES			
Tertiary Filters			
Number of Cells	-	8	12
Type	-	Monomedia Deep Bed	Monomedia Deep Bed
Cell Dimension	ft.	11 x 23	11 x 23
Hydraulic Loading (Avg. Flow)	gpm/sq. ft.		
All filters on-line		3.43	3.68
W/1 cell in backwash		3.92	4.02
Media			
Type	-	Anthracite	Anthracite
Effective size	mm.	1.5	1.5
Uniformity coefficient	-	1.4 or less	1.4 or less
Depth	in.	48	48
Maximum Backwash Rate	gpm/sq. ft.	24	24
	in/min.	38.4	38.4
Maximum Air Scour Rate	scfm/sq. ft.	5	5
Filter Backwash Pumps			
Number	-	3	3
Capacity, each	gpm	3,000 @ 20' TDH	3,000 @ 20' TDH
Power	hp	20	20
Filter Influent Pumps			
Number	-	2	3
Capacity, each	gpm	6,100 @ 32' TDH	6,100 @ 32' TDH
Power	hp	75	75
Waste Washwater System			
Number of Storage Tanks	-	1	1
Volume	gal	120,000	120,000
Transfer Pumps:			
Number	-	3	3
Capacity, each	gpm	500 @ 37' TDH	500 @ 37' TDH
Power	hp	5	5
Balancing Pond			
Volume	million gal	1.8	2.25
Effluent Pond			
Volume	million gal	0.4	0.4
Chlorine Contact Basins			
Number of Channels	-	3	5
Length per Channels	ft.	250	250
Channel width	ft.	6	9 (width of additional 2 only)
Channel Depth	ft.	22.5	22.5
Detention Time	min		
average flow	min	125	122
wet peak flow		54	54
EFFLUENT PUMP STATION			
Constant Speed Vertical Turbine			
Number	-	2	2
Capacity, each	gpm	4,200 @ 560' TDH 5,500 @ 420' TDH	4,200 @ 560' TDH 5,500 @ 420' TDH
Power, each	hp	800	800
Constant Speed Vertical Turbine			
Number	-		1
Capacity	gpm		4,860 @ 550' TDH 6,250 @ 440' TDH
Power	hp		900

ITEM	UNITS	EXISTING	PROPOSED
Surge Tank			
Number	-	1	2
Volume (ea)	cu ft	400	400
CHEMICAL REQUIREMENTS			
Alum Requirements			
Type	-	Liquid, 50% solution	Liquid, 50% solution
Dosage Range	mg/l	0-5	0-5
Feed Rate			
average flow	lbs/day	416	670
wet peak flow	lbs/day	930	1500
Feed Rate			
average flow	gpd	100	160
wet peak flow	gpd	223	360
Feeder			
Number	-	2	2
Capacity	gpd	624 @ 50 psi	624 @ 50 psi
Storage Capacity at avg. flow	days	75	47
Polymer Requirements			
Dosage Range			
liquid	mg/l	0-2	0-2
dry	mg/l	0-0.2	0-0.2
Feed Rate Liquid			
average flow	gph	2	3
peak flow	gph	4	6
Feed Rate Dry			
average flow	lbs/day	17	27
peak flow	lbs/day	37	60
Feeder Capacity			
cationic, number	-	2	1
capacity	gph	13 @ 50 psi	13 @ 50 psi
nonionic, number	-	2	1
capacity	gph	50 @ 50 psi	50 @ 50 psi
dry, number	-	1	1
capacity	lbs/day	27	27
Caustic Requirements			
Type	-	-	Liquid, 25% solution
Dosage Range	mg/l	-	5
Feed Rate			
average flow	lbs/day	-	675
	gph	-	13.5
peak flow	lbs/day	-	1500
	gph	-	30
Feeder Capacity			
Number	-	-	2
Capacity	gph	-	50 @ 50 psi
Storage Capacity			
number tanks	ea	-	2
volume, ea	gal.	-	4500
Total at avg. flow	days	-	25
Chlorine Requirements			
Chlorine Contact Channels			
Dosage Range	mg/l	0-11	0-11
Feed Rate			
average flow	lbs/day	920	1,480
wet peak flow	lbs/day	2,045	3,300
Filters			
Dosage Range	mg/l	0-4	0-4
Feed Rate			
average flow	lbs/day	335	540
wet peak flow	lbs/day	750	1,200
Storage Capacity at Average Flow	days	67	42
Total Chlorine Storage Volume	tons	42	42
Evaporators			
4,000 lbs/day	-	2	2
Chlorinators			
1,000 lbs/day	-	1	0
2,000 lbs/day	-	2	2
4,000 lbs/day	-	0	2
Pentec Pump Gas Ejector			
2,000 lbs/day	-	1	2

ITEM	UNITS	EXISTING	PROPOSED
Sulfur Dioxide Requirements			
Dosage Range	mg/l	0-10	0-10
Feed Rate			
average flow	lbs/day	834	1,350
wet peak flow	lbs/day	1,860	3,000
Storage Capacity at Avg. Flow	days	38	24
Total Sulfur Dioxide Storage Volume	tons	16	16
Evaporators			
4,000 lbs/day	-	2	2
Sulfonators			
1,000 lbs/day	-	1	0
2,000 lbs/day	-	1	2
4,000 lbs/day	-	0	1

04675

08.24.94 C.O.N.

REGISTERED PROFESSIONAL ENGINEER 3-31-91 CIVIL STATE OF CALIFORNIA

PROJECT RECORD DOCUMENT
C W Blair Const Co
P O Box Danville CA 94526
DATE 2-16-94 By

FILE No.

JOB No.

REV	DATE	BY	DESCRIPTION

SCALE: NONE

WARNING 0 1/2 1 IF THIS BAR DOES NOT MEASURE 1" THEN DRAWING IS NOT TO SCALE.

DESIGNED J. Pacan
DRAWN CAD
CHECKED J. Pacan

SUBMITTED
PROJECT ENGINEER — 41019 R. C. E. NO. — 11/26/90 DATE
JAMES M. MONTGOMERY CONSULTING ENGINEERS, INC. — 33699 R. C. E. NO. — 11/26/90 DATE

JMM James M. Montgomery Consulting Engineers, Inc.
Pasadena, California

APPROVED DISTRICT ENGINEER DATE
APPROVED DATE

LAS VIRGENES MWD / TRIUNFO CSD
TAPIA WRF - REGIONAL FACILITIES EXPANSION IV
FILTRATION / DISINFECTION ADDITION

DESIGN CRITERIA

SHEET G-3 OF 110 SHEETS

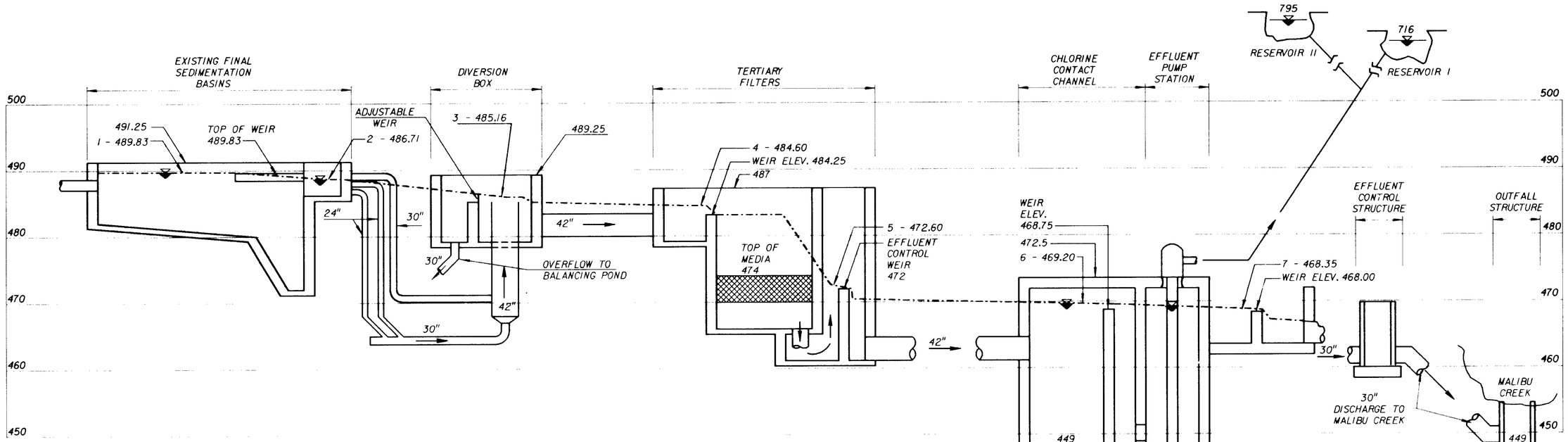

HYDRAULIC PROFILE FOR 36 MGD

W.S.	ELEVATION
1	491.51
2	491.40
3	487.71
4	484.85
5	473.03
6	469.52
7	468.72

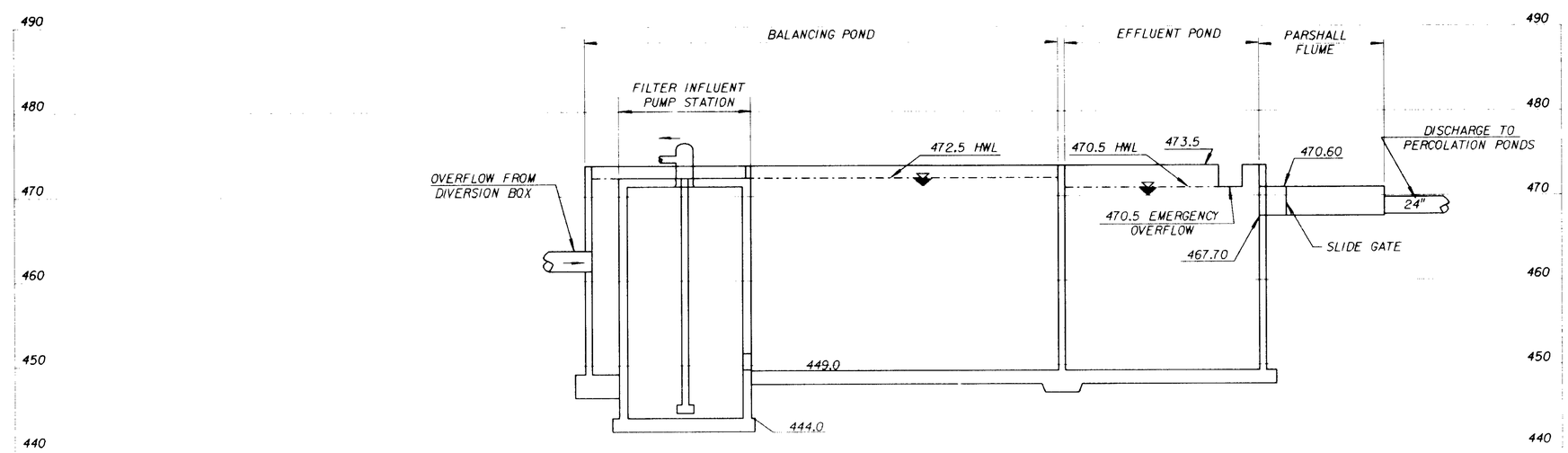

LVMWD - TAPIA PLANT
HYDRAULIC PROFILE FOR 16.1 MGD

04676

PROJECT RECORD DOCUMENT
C W Roen Const Co
P O 4 Danville CA 94526
DATE 2-16-94 By

09.24.94

REV	DATE	BY	DESCRIPTION

SCALE: VERT: 1"=8' HOR: NONE

WARNING: 0 ½ 1 — IF THIS BAR DOES NOT MEASURE 1" THEN DRAWING IS NOT TO SCALE.

DESIGNED Pacer
DRAWN
CHECKED Pacer

SUBMITTED PROJECT ENGINEER — R. C. E. NO. 41019 — DATE 11/26/90
JAMES M. MONTGOMERY CONSULTING ENGINEERS, INC. — R. C. E. NO. 33699 — DATE 11/26/90

JMM James M. Montgomery Consulting Engineers, Inc.
Pasadena, California

APPROVED DISTRICT APPROVAL ON COVERSHEET DATE
APPROVED DATE

LAS VIRGENES MWD / TRIUNFO CSD
TAPIA WRF - REGIONAL FACILITIES EXPANSION IV
FILTRATION / DISINFECTION ADDITION

HYDRAULIC PROFILE

SHEET G-4 OF 110 SHEETS

JOB No. FILE No.

MASONRY
CAST IRON
STEEL
BRONZE
INSULATION
GRAVEL
CONCRETE
EARTH
SAND
ALUMINUM OR METAL DECKING OR CONCRETE
CHECKERED PLATE
SPAN — GRATING
PLASTIC, RUBBER OR NEOPRENE
WOOD (FINISH)
WOOD (ROUGH FRAMING) OR, OPENING OR DEPRESSION IN SLAB OR WALL
12x24 — DUCT (FIRST DIMENSION DUCT SIDE SHOWN, SECOND DIMENSION DUCT SIDE NOT SHOWN)
24x12 — SUPPLY OR OUTSIDE AIR DUCT (FIRST DIMENSION, DUCT WIDTH)
24x12 — EXHAUST OR RETURN AIR DUCT (FIRST DIMENSION, DUCT WIDTH)
SIZE / CFM — CEILING SUPPLY DIFFUSER (SIZE IN INCHES)
SIZE / CFM — CEILING RETURN OR EXHAUST AIR GRILLE OR REGISTER (SIZE IN INCHES, WIDTH X HEIGHT)
SIZE / CFM — EXHAUST OR RETURN AIR GRILLE OR REGISTER (SIZE IN INCHES, WIDTH X HEIGHT)
SIZE / CFM — SUPPLY GRILLE OR REGISTER (SIZE IN INCHES, WIDTH X HEIGHT)
AIR TURNING VANES IN DUCT
DD — DEFLECTING DAMPER
FHC — FIRE HOSE CABINET
FE — FIRE EXTINGUISHER
UNIT HEATER
CENTERLINE
PROPERTY LINE
NEW STRUCTURE OR FACILITY
EXISTING STRUCTURE OR FACILITY
FUTURE STRUCTURE OR FACILITY
NEW FENCE
EXISTING FENCE
NEW PIPELINE (CIVIL SHEETS) 36" DIA. AND LARGER
NEW PIPELINE (CIVIL SHEETS) 12" DIA. TO 34" DIA.
NEW PIPELINE (CIVIL SHEETS) 10" DIA. AND SMALLER
EXISTING PIPELINE

123 — CONTOUR LINE, FINISHED GRADE
123 — CONTOUR LINE, EXISTING GRADE
123.20 — FINISHED ELEVATION
(123.20) — EXISTING ELEVATION
TOP / TOE — CUT OR FILL SLOPE TO BE CONSTRUCTED
NEW A.C. PAVING
EXISTING A.C. PAVING
RAILING
FH — FIRE HYDRANT
MH — MANHOLE
PCOTG — PRESSURE CLEANOUT TO GRADE
WCO — WALL CLEANOUT
FCO — FLOOR CLEANOUT
COTG — CLEANOUT TO GRADE
BLOW OFF ASSEMBLY
HUB DRAIN
FLOOR DRAIN
FLOOR SINK
DRAIN TRAP
SOIL BORING
BENCH MARK
HORIZONTAL AND VERTICAL CONTROL POINT
VAULT OR JUNCTION STRUCTURE
CHANGE IN PIPING MATERIAL
ROUND OR DIAMETER
SQUARE
@ — AT
ANGLE
24" RW-RCP — PIPE SIZE, FLUID ABBREVIATION AND TYPE OF PIPE
2" UW (2) — PIPE CALLOUT (SEE PIPING SCHEDULE)
ME-2 — EQUIPMENT NUMBER (SEE EQUIPMENT SCHEDULE)
BACKWATER VALVE
BACKFLOW PREVENTER
STOP GATE
SLIDE GATE
SLUICE GATE

GATE VALVE, BURIED WITH VALVE BOX
BUTTERFLY VALVE, BURIED WITH VALVE BOX
ECCENTRIC PLUG VALVE, BURIED WITH VALVE BOX
LUBRICATED PLUG VALVE, BURIED WITH VALVE BOX
GATE VALVE
BUTTERFLY VALVE
ECCENTRIC PLUG VALVE
LUBRICATED PLUG VALVE
GLOBE VALVE
BALL VALVE
DIAPHRAGM VALVE
CHECK VALVE
PRESSURE REGULATING VALVE
BACK-PRESSURE VALVE
M / P — MOTOR OPERATOR FOR VALVES (M - ELECTRIC, P - PNEUMATIC)
T — TEMPERATURE CONTROL VALVE
S — SOLENOID VALVE
MULTIPORT VALVE - 3 WAY
MULTIPORT VALVE - 4 WAY
FLOAT OPERATED VALVE
NEEDLE VALVE
PRESSURE RELIEF VALVE
ANGLE VALVE
HOSE BIBB (H/B)
B — BUBBLER LEVEL CONTROL
CENTRIFUGAL OR TURBINE PUMP OR FAN
METERING PUMP
PROGRESSING CAVITY, POSITIVE DISPLACEMENT PUMP
BLOWER OR COMPRESSOR
INJECTOR OR EDUCTOR
F/A — FLAME ARRESTER
AIR VACUUM AND AIR RELEASE ASSEMBLY
THERMOMETER
PIPE ANCHOR

T — ROOM THERMOSTAT
G — PRESSURE GAUGE
G — PRESSURE GAUGE WITH DIAPHRAGM SEAL
S — PRESSURE SWITCH
S — PRESSURE SWITCH WITH DIAPHRAGM SEAL
FLANGED FITTING
WELDED FITTING
MECHANICAL-TYPE FITTING (GROOVED)
SCREWED, SOCKET-WELD, BELL AND SPIGOT OR HUBLESS FITTING
SLEEVE-TYPE COUPLING
FLANGED ADAPTER COUPLING
FLANGED ADAPTER - SET SCREW TYPE
EXPANSION JOINT
MECHANICAL TYPE COUPLING
FLEXIBLE COUPLING
UNION
QUICK DISCONNECT COUPLER
CAPPED END OR PLUGGED END
BLIND FLANGE
REDUCER OR INCREASER
CUT PIPE
STRAINER
DRAIN
FLOW TUBE
M M — MAGNETIC METER
D M — DENSITY METER
P M — PROPELLER METER
ORIFICE PLATE AND FLANGES
ROTAMETER
T — CONDENSATE TRAP
PIPE SUPPORT (IN PLAN ONLY)
CB — CATCH BASIN
PULSATION DAMPENER
EXPANSION CHAMBER WITH RUPTURE DISC
RUPTURE DISC
FG — FLOW SIGHT GLASS

SECTION AND DETAIL IDENTIFICATION

SECTION IDENTIFICATION

(1) SECTION CUT ON DRAWING G-1:

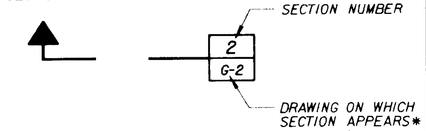

(2) ON DRAWING G-2 THIS SECTION IS IDENTIFIED AS:

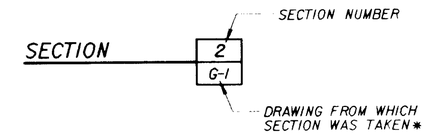

DETAIL IDENTIFICATION

(1) DETAIL CALL-OUT ON DRAWING G-2 AS:

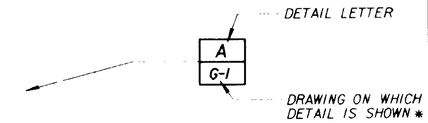

(2) ON DRAWING G-1 THIS DETAIL IDENTIFIED AS:

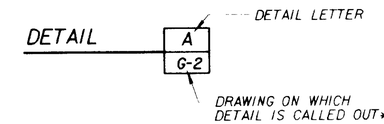

STANDARD DETAIL IDENTIFICATION

(1) DETAIL CALL-OUT ON PLAN OR SECTION:

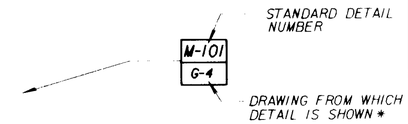

(2) ON DRAWING G-4 THIS DETAIL IDENTIFIED AS:

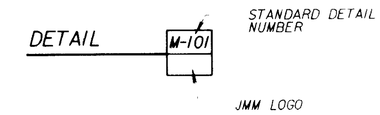

JMM LOGO

*NOTE: IF PLAN AND SECTION (OR DETAIL CALL-OUT AND DETAIL) ARE SHOWN ON SAME DRAWING, DRAWING NUMBER IS REPLACED BY A LINE.

NOTES:

(1) ELECTRICAL SYMBOLS SHOWN ON ELECTRICAL SHEETS.

(2) FOR WELDING SYMBOLS USE AMERICAN WELDING SOCIETY STANDARD SYMBOLS. SEE AMERICAN INSTITUTE OF STEEL CONSTRUCTION MANUAL.

04677

REV. 091587

REGISTERED PROFESSIONAL ENGINEER — JAMES M. MONTGOMERY — No. 19184 — EXP. 9-30-93 — CIVIL — STATE OF CALIFORNIA

PROJECT RECORD DOCUMENT
C W Rain Const Co
P O 4, Danville, CA 94526
DATE: 2-16-94 BY: [illegible]

FILE No. 39.1449 (Old)
JOB No.

REV	DATE	BY	DESCRIPTION

SCALE: NONE

WARNING: 0 1/2 1 — IF THIS BAR DOES NOT MEASURE 1" THEN DRAWING IS NOT TO SCALE.

DESIGNED JMM
DRAWN JMM
CHECKED JMM

SUBMITTED: Gerald M. Dixon, PROJECT ENGINEER — 41019 R. C. E. NO. — 11/26/90 DATE
JAMES M. MONTGOMERY CONSULTING ENGINEERS, INC. — 33699 R. C. E. NO. — 11/26/90 DATE

JMM James M. Montgomery Consulting Engineers, Inc.
Pasadena, California

APPROVED: SEE APPROVAL ON COVERSHEET — DATE
APPROVED — DATE

LAS VIRGENES MWD / TRIUNFO CSD
TAPIA WRF - REGIONAL FACILITIES EXPANSION IV
FILTRATION / DISINFECTION ADDITION

SYMBOLS

SHEET G-5 OF 110 SHEETS

A	AIR
AB	ANCHOR BOLT
ABBR	ABBREVIATION
ABS	ABSOLUTE TEMPERATURE
AC	ACTIVATED CARBON, ASPHALTIC CONCRETE, OR ALTERNATING CURRENT
A/C	AIR CONDITIONING
ACOUS	ACOUSTIC OR ACOUSTICAL
ACP	ASPHALTIC CONCRETE PAVEMENT OR ASBESTOS CEMENT PIPE
ADJ	ADJUSTABLE
AER	AERATION
AL	ALUMINUM OR ALUM
ALUM	ALUMINUM
AMB	AMBIENT
ANSI	AMERICAN NATIONAL STANDARDS INSTITUTE (FORMERLY A.S.A.)
API	AMERICAN PETROLEUM INSTITUTE
APPD	APPROVED
APPROX	APPROXIMATE
ARCH	ARCHITECTURAL
ASA	AMERICAN STANDARDS ASSOCIATION (NOW ANSI)
ASME	AMERICAN SOCIETY OF MECHANICAL ENGINEERS
ASTM	AMERICAN SOCIETY FOR TESTING AND MATERIAL
ASSY	ASSEMBLY
AT	ACOUSTICAL TILE
ATM	ATMOSPHERE
AVAR	AIR VACUUM AND AIR RELEASE VALVE
AWWA	AMERICAN WATER WORKS ASSOCIATION
BA	BEARING AREA
BC	BEGIN CURVE, BOLT CIRCLE OR BETWEEN CENTERS
BCR	BEGIN CURB RETURN
BD	BOARD
BF	BLIND FLANGE
BFP	BACK FLOW PREVENTER
BHP	BRAKE HORSEPOWER
BLDG	BUILDING
BLD FLG	BLIND FLANGE
BLK	BLACK OR BLOCK
BLKG	BLOCKING
BM	BEAM OR BENCH MARK
BO	BLOW-OFF ASSEMBLY
BOD	BIOCHEMICAL OXYGEN DEMAND
BOT	BOTTOM
BPV	BACK PRESSURE VALVE
BRK	BRICK
B & S	BELL AND SPIGOT
BSMT	BASEMENT
BT	BOLT
BTU	BRITISH THERMAL UNIT
BV	BUTTERFLY VALVE
BVC	BEGIN VERTICAL CURVE
BWV	BACK WATER VALVE
C	CENTIGRADE
CAB	CABINET
CAP	CAPACITY
CB	CATCH BASIN OR CHALK BOARD
CC	CENTER TO CENTER
CD	CEILING DIFFUSER
CLR	CLEAR
CEM	CEMENT
CER	CERAMIC
CFH	CUBIC FEET PER HOUR
CFM	CUBIC FEET PER MINUTE
CFS	CUBIC FEET PER SECOND
CHEM	CHEMICAL
CHG	CHANGE
CHK V	CHECK VALVE
CHKD PL	CHECKERED PLATE
CI	CAST IRON
CJ	CONSTRUCTION JOINT
CL	CHLORINE GAS, CHLORINATOR, CHAIN LINK, CLEARANCE OR CENTERLINE
CLG	CEILING
CLOS	CLOSET
CLR	CLEAR
CM	CENTIMETER
CML & C	CEMENT MORTAR LINED AND COATED
CMP	CORRUGATED METAL PIPE
CMU	CONCRETE MASONRY UNIT
CO	CLEANOUT
COL	COLUMN
CONC	CONCRETE OR CONCENTRIC
COND	CONDENSER OR CONDENSATE
CONN	CONNECTION
CONSTR	CONSTRUCTION OR CONSTRUCT
CONT	CONTINUED OR CONTINUOUS
CONTR	CONTRACTOR
COMP	COMPRESSOR
COTG	CLEAN-OUT TO GRADE
CPLG	COUPLING
CPVC	CHLORINATED POLYVINYL CHLORIDE
CS	CAUSTIC SODA OR CAST STEEL
CT	CERAMIC TILE
CTSK	COUNTERSUNK
CTR	CENTER
CU	COPPER OR CUBIC
CYL	CYLINDER
d	PENNY
DBL	DOUBLE
DC	DIRECT CURRENT
DET	DETAIL
DF	DRINKING FOUNTAIN OR DOUGLAS FIR
DG	DOOR GRILLE
DI	DUCTILE IRON
DIA	DIAMETER
DIAG	DIAGONAL
DIAPH	DIAPHRAGM
DISCH	DISCHARGE
DISP	DISPENSER
DN	DOWN OR DECANT
DO	DISSOLVED OXYGEN
DR	DOOR OR DRAIN
DS	DRENCH SHOWER AND EYE WASH
DWG	DRAWING
DIFF	DIFFUSER OR DIFFERENTIAL

E	EAST
EA	EACH
EB	EXPANSION BOLT OR ANCHOR
EC	END CURVE
ECC	ECCENTRIC
ECR	END CURB RETURN
EF	EACH FACE OR EXHAUST FAN
EFF	EFFLUENT
EG	EXHAUST GRILLE OR EXISTING GRADE
EL	ELEVATION
ELEC	ELECTRICAL OR ELECTRONIC
ENG	ENGINE
EPT	ETHYLENE PROPYLENE
ENCL	ENCLOSURE
ENT	ENTRANCE
EQ	EQUAL
EQUIP	EQUIPMENT
EVAP	EVAPORATOR
EVC	END VERTICAL CURVE
EW	EACH WAY OR EYE WASH
EXH	EXHAUST
EX-HY	EXTRA HEAVY
EXIST	EXISTING
EXP JT	EXPANSION JOINT
EXT	EXTERIOR OR EXTENSION
EXTR	EXTRUDED
F	FAHRENHEIT OR FINISH
FABR	FABRICATION, FABRICATE OR FABRICATED
FAI	FRESH AIR INTAKE
FB	FLAT BAR, FLOOR BEAM OR FIELD BOOK
FCO	FLOOR CLEANOUT
FD	FLOOR DRAIN
FDR	FEEDER
FE	FIRE EXTINGUISHER OR FINAL EFFLUENT
FEM	FEMALE (PIPE THREAD)
FF	FLAT FACE OR FAR FACE
F TO F	FACE TO FACE
FG	FINISHED GRADE
FH	FIRE HYDRANT
FIG	FIGURE
FIN	FINISHED
FIX	FIXTURE
FL	FLOWLINE OR FLOOR
FLEX	FLEXIBLE
FLOCC	FLOCCULATOR OR FLOCCULATION
FLG	FLANGE OR FLOORING
FLGD	FLANGED
FLR	FLOOR
FM	FACTORY MUTUAL (LAB. APPROVED)
FMH	FLEXIBLE METAL HOSE
FND	FOUNDATION
FOC	FACE OF CONCRETE
FOM	FACE OF MASONRY
FOS	FACE OF STUDS
FOW	FACE OF WALL
FPC	FLEXIBLE PIPE COUPLING
FPM	FEET PER MINUTE
FPS	FEET PER SECOND
FR	FRAME
FRP	FIBERGLASS REINFORCED PLASTIC
FS	FAR SIDE, FLOOR SINK, FINISHED SURFACE, FORGED STEEL
	FROTH SPRAY OR FACTOR OF SAFETY
FT	FEET OR FOOT
FT. LB	FOOT-POUND
FTG	FOOTING
FUT	FUTURE
GA	GAGE OR GAUGE
GAL	GALLON
GALV	GALVANIZED
GEN	GENERAL OR GENERATOR
GFA	GROOVED FLANGE ADAPTER
GI	GALVANIZED IRON
GL	GLASS
GL/BM	GLUE LAMINATED BEAM
GLV	GLOBE VALVE
GPD	GALLONS PER DAY
GPH	GALLONS PER HOUR
GPM	GALLONS PER MINUTE
GRD	GRADE OR GROUND
GR BRK	GRADE BREAK OR GRADE CHANGE
GRTG	GRATING
GV	GATE VALVE
GYP	GYPSUM
H/B	HOSE BIBB
HDR	HEADER
HDW	HARDWARE
HEX	HEXAGONAL
Hg	MERCURY
HGR	HANGER
HGT	HEIGHT
HM	HOLLOW METAL
HORIZ	HORIZONTAL
HP	HORSEPOWER OR HIGH PRESSURE
H/P	HIGH POINT
HR	HEATING RETURN OR HOUR
HTG	HEATING
HTR	HEATER
H & V	HEATING AND VENTILATING
HVAC	HEATING, VENTILATING AND AIR CONDITIONING
HWL	HIGH WATER LEVEL
HWD	HARDWOOD
HWO	HANDWHEEL OPERATED
HV	HORIZONTAL AND VERTICAL CONTROL POINT
HYD	HYDRAULIC OR HYDRANT

ID	INSIDE DIAMETER
IF	INSIDE FACE
IN	INCH
INFL	INFLUENT
IN. LB	INCH-POUND
INSL	INSULATION OR INSULATED
INSTR	INSTRUMENT
INT	INTERIOR
INV	INVERT ELEVATION
IP	IRON PIPE
IPS	IRON PIPE SIZE
IRRG	IRRIGATION
JAN	JANITOR
JT	JOINT
K	KELVIN, KILO OR KARAT
KG	KILOGRAM
KM	KILOMETER
KV	KILOVOLT
KW	KILOWATT
KWH	KILOWATT HOUR
L/P	LOW POINT
L	LITER OR LENGTH
LAB	LABORATORY
LAM	LAMINATED
LAV	LAVATORY
LB	POUND
LDG	LANDING
LEV	LEVEL
LG	LENGTH OR LONG
LT	LEFT OR LIGHT
LWL	LOW WATER LEVEL
LWR	LOWER
M	METER OR MALE (PIPE THREAD)
MAG	MAGNETIC
MAN	MANUAL
MACH	MACHINE
MAX	MAXIMUM
MCC	MOTOR CONTROL CENTER
MECH	MECHANICAL
MED	MEDIUM
MEMB	MEMBRANE
MFR	MANUFACTURER
MFR'D	MANUFACTURED
MGD	MILLION GALLONS PER DAY
MH	MANHOLE
MI	MALLEABLE IRON
MICRON	1/1,000,000 METER
MIL	MILITARY, 1/1,000 INCH
MIN	MINIMUM OR MINUTE
MIR	MIRROR
MISC	MISCELLANEOUS
MK	MARK
MO	MOTOR OPERATED OR MANSONRY OPENING
MOD	MODEL
MS	MOP SINK
MTC	MECHANICAL-TYPE COUPLING
MTD	MOUNTED
MTG	MOUNTING
MTL	MATERIAL OR METAL
MTR	MOTOR
N	NORTH
NBS	NATIONAL BUREAU OF STANDARDS
NC	NORMALLY CLOSED
NEC	NATIONAL ELECTRICAL CODE
NEMA	NATIONAL ELECTRICAL MANUFACTURERS ASSOCIATION
NFPA	NATIONAL FIRE PROTECTION ASSOCIATION
NF	NEAR FACE
NG	NATURAL GRADE OR NATURAL GAS
NIC	NOT IN CONTRACT
NO	NUMBER OR NORMALLY OPEN
NOM	NOMINAL
NPS	NOMINAL PIPE SIZE (FORMERLY I.P.S.)
NPT	NATIONAL PIPE THREAD
NRS	NON-RISING STEM
NS	NEAR SIDE
NTS	NOT TO SCALE
O.	OVER-CROSSING OR ON CENTER
OD	OUTSIDE DIAMETER OR OVERALL DIMENSION
OF	OVERFLOW OR OUTSIDE FACE
OFF	OFFICE
OH	OVER HEAD
OPER	OPERATOR OR OPERATING
OPNG	OPENING
OS & Y	OUTSIDE SCREW AND YOKE
OWG	OIL, WATER, GAS
OZ	OUNCE

P/S	POLE AND SHELF
P	POLE, PAGE OR PIPE
PART	PARTITION
PAVMT	PAVEMENT
PB	POLYBUTYLENE
PC	PRIMARY CLARIFIER OR PORTLAND CEMENT
PCC	PORTLAND CEMENT CONCRETE
PCOTG	PRESSURE CLEANOUT TO GRADE
PE	PLANT EFFLUENT, POLYELECTROLYTE POLYMER OR POLYETHYLENE
PG	PRESSURE GAGE
pH	HYDROGEN ION CONCENTRATION
PI	PLANT INFLUENT OR POINT OF INTERSECTION
PL	PLATE, PROPERTY LINE OR PLACE
PLAS	PLASTER OR PLASTIC
PLYWD	PLYWOOD
PNEU	PNEUMATIC
PNL	PANEL
PM	PRESSED METAL
PP	POWER POLE OR POLYPROPYLENE
PLT	PLANT
PPD	POUNDS PER DAY
PPH	POUNDS PER HOUR
PPM	PARTS PER MILLION
PR	PAIR
PRCT	PRECAST
PREFAB	PREFABRICATED
PRESS	PRESSURE
PRV	PRESSURE REGULATING, RELIEF OR REDUCING VALVE
PS	PRESSURE SWITCH
PSF	POUNDS PER SQUARE FOOT
PSI	POUNDS PER SQUARE INCH
PSIA	POUNDS PER SQUARE INCH ABSOLUTE
PSIG	POUNDS PER SQUARE INCH GAUGE
PT	PAINT
PTDF	PRESSURE TREATED DOUGLAS FIR
PTFE	POLYTETRAFLUOROETHYLENE (TEFLON®)
PV	PLUG VALVE
PVC	POLYVINYL CHLORIDE
PVDF	POLYVINYLIDENE FLUORIDE (KYNAR®)
QT	QUARRY TILE
QTY	QUANTITY
R	RADIUS, RISER, RETURN OR RATE OF SLOPE
RAG	RETURN AIR GRILLE
RC	REINFORCED CONCRETE
RCP	REINFORCED CONCRETE PIPE
RD	ROOF DRAIN, ROUND, OR ROAD
RDWD	REDWOOD
RECIRC	RECIRCULATED
RED	REDUCER OR REDUCING
REF	REFERENCE OR REFER
REG	REGULATING
REIN	REINFORCE OR REINFORCED
RE-STL	REINFORCING STEEL
REQD	REQUIRED
RESIL	RESILENT
REV	REVISION
RFG	ROOFING
RF	ROOF OR RAISED FACE
RM	ROOM
RO	ROUGH OPENING
RPM	REVOLUTIONS PER MINUTE OR REINFORCED PLASTIC MORTAR
RR	RAILROAD
RS	RISING STEM
RT	RIGHT
RTP	REINFORCED THERMOSETTING PLASTIC
R/W	RIGHT OF WAY
RW	REDWOOD
RWL	RAINWATER LEADER
S	SOUTH, SCUM, SINK, SECOND OR SLOPE
SA	SAMPLE
SBR	STYRENE BUTADENE (RUBBER)
SC	SPARE CHEMICAL OR SECONDARY CLARIFIER
SCD	SCREWED
SCFM	STANDARD CUBIC FEET PER MINUTE
SCH	SCHEDULE
SDR	STORM DRAINS
SEC	SECONDARY
SECT	SECTION
SER	SERIES
SETT	SETTLING
SH	SHOWER
SHT	SHEET OR SHELF
SHTG	SHEATHING
SIM	SIMILAR
SL	SLUDGE OR SLOPE
SOLN	SOLUTION
SLDG	SLIDING
SP	STATIC PRESSURE
SPECS	SPECIFICATIONS
SPECF	SPECIFIED
SQ	SQUARE
SS	SANITARY SEWER, STAINLESS STEEL OR SERVICE SINK
SSU	SECONDS SAYBOLT UNIVERSAL
STA	STATION
STC	SLEEVE-TYPE COUPLING
STD	STANDARD
STL	STEEL
STM	STEAM
STN	STAINLESS
STN STL	STAINLESS STEEL
STRUCT	STRUCTURAL OR STRUCTURE
SUCT	SUCTION
SV	SOLENOID VALVE
SWR	SIDEWALL REGISTER
SYM	SYMMETRICAL OR SYMBOL
SYS	SYSTEM
T	THERMOSTAT, TREAD OF STAIR, TANGENT OR TOP
TB	TACK BOARD
T & B	TOP AND BOTTOM
TBE	THREAD BOTH ENDS
TBM	TEMPORARY BENCH MARK
TC	TOP OF CURB
TEMP	TEMPERATURE OR TEMPORARY
T & G	TONGUE AND GROOVE
THK	THICK OR THICKNESS
THR	THRESHOLD
THRD	THREADED
TK	TANK
TOE	THREAD ONE END
TOL	TOILET
TP	TELEPHONE POLE OR TELEGRAPH POLE
TRANS	TRANSITION OR TRANSMITTER
TSB	TOP SET BASE
TV	THERMOSTATIC VALVE OR TELEVISION
TW	TOP OF WALL OR THERMOMETER WELL
TYP	TYPICAL
UB	UNION BONNET
UC	UNDER-CROSSING
UG	UNDERGROUND
UGC	UNDERGROUND CONDUIT
UH	UNIT HEATER
UL	UNDERWRITERS LABORATORIES
UR	URINAL
V	VACUUM, VALVE, VERTICAL, VENT, VOLT OR VOLUME
VAR	VARIES OR VARIABLE
VCP	VITRIFIED CLAY PIPE
VERT	VERTICAL
VOL	VOLUME
VTC	VENT TO CEILING
VTR	VENT THROUGH ROOF
VWC	VINYL WALL COVERING
W	WEST OR WASTE
W/	WITH
WC	WATER COLUMN OR WATER CLOSET
WCO	WALL CLEANOUT
WD	WOOD
WH	WATER HEATER
WI	WROUGHT IRON
W/O	WITHOUT
WOG	WATER, OIL OR GAS WORKING PRESSURE
WP	WATER PROOFING
WS	WATER SURFACE
WSTP	WATER STOP
WT	WEIGHT
WWM	WELDED WIRE MESH
WWP	WATER WORKING PRESSURE
XS	EXTRA STRONG
XXS	DOUBLE EXTRA STRONG
YD	YARD
YR	YEAR
Z	ZERO OR ZONE
ZN	ZINC

04678

NOTES:

ADDITIONAL PIPING ABBREVIATIONS SHOWN ON PIPE SCHEDULE SHEET

ELECTRICAL ABBREVIATIONS SHOWN ON ELECTRICAL SHEETS

ADDITIONAL HEATING, VENTILATING AND AIR CONDITIONING ABBREVIATIONS SHOWN ON MECHANICAL SHEETS

ADDITIONAL ABBREVIATIONS CONFORM TO ANSI STANDARD ABBREVIATIONS Z32.2.3

REGISTERED PROFESSIONAL ENGINEER — NO. 19184 — EXP. 9-30-93 — CIVIL — STATE OF CALIFORNIA

REV. 091587

PROJECT RECORD DOCUMENT
C W Roen Const Co
P O 4 Danville, CA 94526
DATE 2-16-94 By

REV	DATE	BY	DESCRIPTION

SCALE: NONE

WARNING: 0 1/2 1 — IF THIS BAR DOES NOT MEASURE 1" THEN DRAWING IS NOT TO SCALE.

DESIGNED VMM
DRAWN VMM
CHECKED VMM

SUBMITTED — PROJECT ENGINEER — R. C. E. NO. 41019 — DATE 11/26/90
JAMES M. MONTGOMERY CONSULTING ENGINEERS, INC. — R. C. E. NO. 33699 — DATE 11/26/90

JMM James M. Montgomery Consulting Engineers, Inc. — Pasadena, California

APPROVED — DISTRICT APPROVAL ON COVERSHEET — DATE
APPROVED — DATE

LAS VIRGENES MWD / TRIUNFO CSD
TAPIA WRF - REGIONAL FACILITIES EXPANSION IV
FILTRATION / DISINFECTION ADDITION

ABBREVIATIONS

SHEET G-6 OF 10 SHEETS

JOB NO. FILE NO.

OR LEGEND OF EXISTING PIPES
SEE MECHANICAL PIPING SCHEDULE

2. TOPOGRAFIC SURVEY WAS PREPARED BY DUBRAN AND ASSOCIATES SURVEYORS LOS ANGELES, CA.

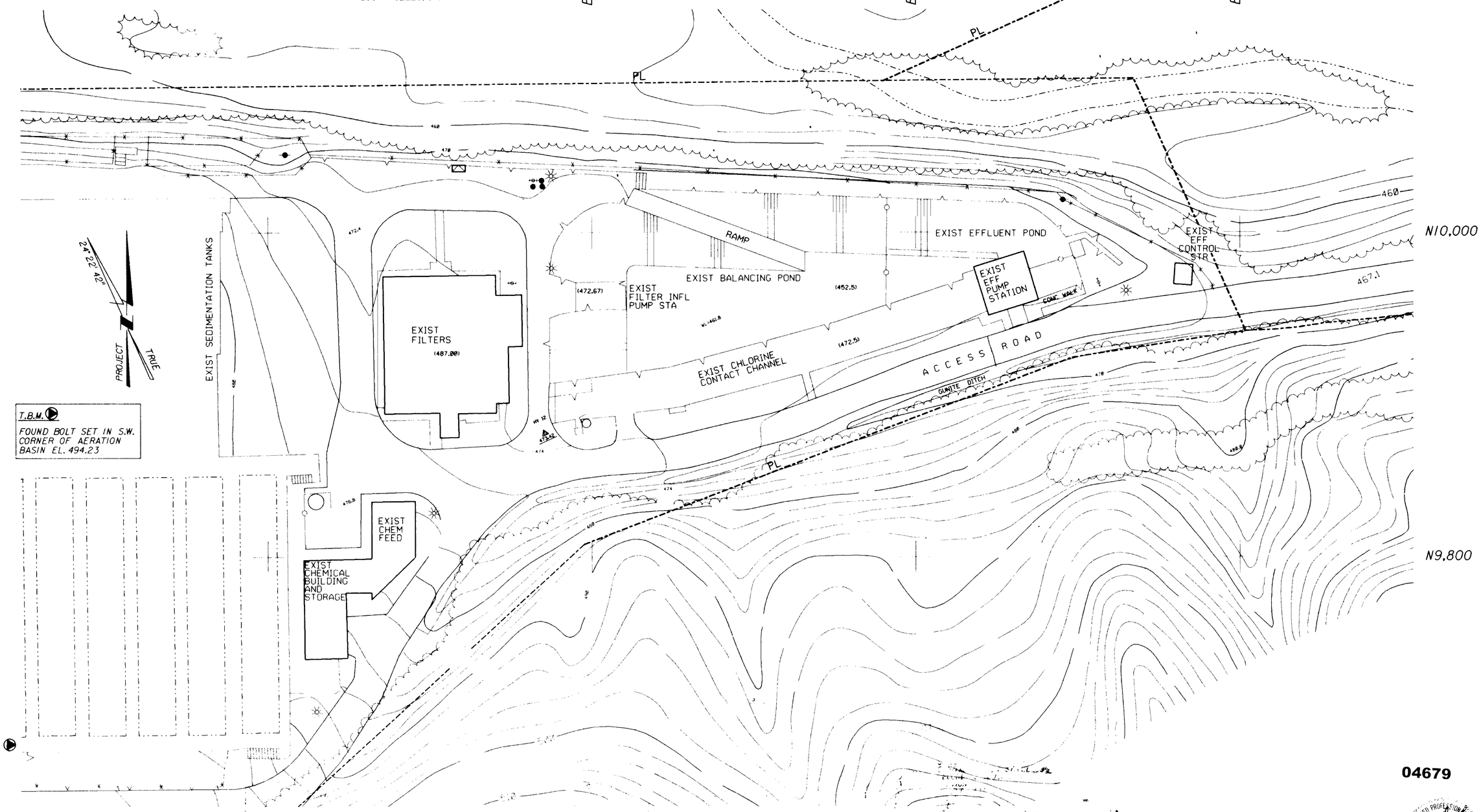

PROJECT RECORD DOCUMENT
C W Rosin Const Co.
P.O. Temecula CA 92526
DATE 1-17-94 By TSE

REGISTERED PROFESSIONAL ENGINEER
NO. 19184
EX. 9-30-93
CIVIL
STATE OF CALIFORNIA

REV	DATE	BY	DESCRIPTION

JOB No. FILE No.

SCALE: 1"=30'

WARNING: 0 1/2 1 — IF THIS BAR DOES NOT MEASURE 1" THEN DRAWING IS NOT TO SCALE.

DESIGNED
DRAWN
CHECKED

SUBMITTED
PROJECT ENGINEER — R. C. E. NO. 41019 — DATE 11/20/90
JAMES M. MONTGOMERY CONSULTING ENGINEERS, INC. — R. C. E. NO. 33699 — DATE 11/20/90

James M. Montgomery
Consulting Engineers, Inc.
Pasadena, California

APPROVED — DATE
APPROVED — DATE

LAS VIRGENES MWD / TRIUNFO CSD
TAPIA WRF - REGIONAL FACILITIES EXPANSION IV
FILTRATION / DISINFECTION ADDITION
SURVEY

SHEET C-1 OF 110 SHEETS

NOTE:
CONSTRUCTION RESTRICTION TO WITHIN THE FENCED AREA MAY BE REQUIRED DUE TO ENVIRONMENTALLY SENSITIVE CREEK AREA. SHORING MAY BE REQUIRED ALONG THE NORTH FENCE AND AT THE EAST AND WEST ENDS OF PONDS.
SEE DETAIL A & NOTE 1 ON SHEET C-10 FOR A CONCEPTUAL SHORING SCHEMATIC.

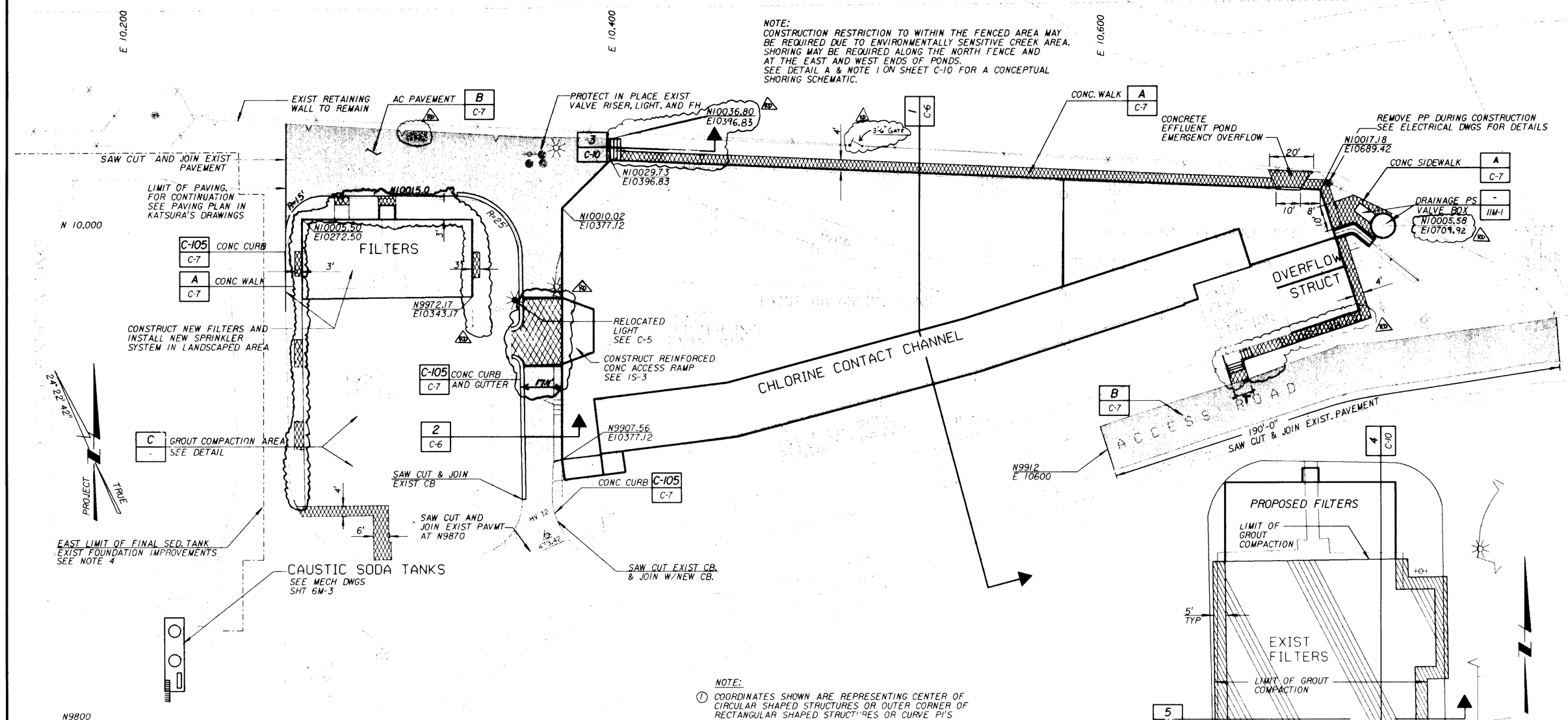

NOTE:

1. COORDINATES SHOWN ARE REPRESENTING CENTER OF CIRCULAR SHAPED STRUCTURES OR OUTER CORNER OF RECTANGULAR SHAPED STRUCTURES OR CURVE PI'S
2. A DETAILED GROUT COMPACTION PLAN FOR THE EXISTING FILTERS AREA SHALL BE DEVELOPED BY THE CONTRACTOR AS SPECIFIED IN SECTION 03316 OF THE SPECIFICATIONS ENTITLED COMPACTION GROUTING AND SUBMITTED TO THE ENGINEER FOR REVIEW
3. NEW PAVEMENT SHALL BE PROVIDED AT ALL AREAS DISTURBED BY THE PLACEMENT OF ALL UNDERGROUND UTILITIES OR OTHERWISE DAMAGED IN THE COURSE OF PERFORMING THE WORK SPECIFIED ON THESE DRAWINGS OR IN THE SPECIFICATIONS.
4. CONTRACTOR SHALL PROTECT IN PLACE THE EXISTING ROCK COLUMNS FOUNDATION IMPROVEMENTS DURING EXCAVATION IN THE AREA OF THE NEW FILTERS. SHORE AS REQUIRED.

PROJECT RECORD DOCUMENT
C.W. Rosa Canal Co.
P.O. 4, Danville, CA 94526
DATE 1-13-94 By BCL

DETAIL - GROUT COMPACTION AREA C

THESE AS-BUILT RECORD DRAWINGS ... THE ... THAT ... TRANSFERRED TO ... RECORD DRAWINGS ... AS-BUILT ... DATE 06.24.94 BY C. Ma

04680

REV	DATE	BY	DESCRIPTION
RD	1-13-94	CWR	Change Sidewalk Layout

SCALE: 1"=20'

WARNING: 0 1/2 1 — IF THIS BAR DOES NOT MEASURE 1" THEN DRAWING IS NOT TO SCALE.

DESIGNED
DRAWN
CHECKED

SUBMITTED
Jorge M. Reen — PROJECT ENGINEER — 41019 R. C. E. NO. — 11/26/90 DATE
JAMES M. MONTGOMERY CONSULTING ENGINEERS, INC. — 33699 R. C. E. NO. — 11/26/90 DATE

JMM James M. Montgomery Consulting Engineers, Inc.
Pasadena, California

APPROVED — CHIEF ENGINEER — DATE
APPROVED — DATE

LAS VIRGENES MWD / TRIUNFO CSD
JAPTP WRF - REGIONAL FACILITIES EXPANSION IV
FILTRATION / DISINFECTION ADDITION

SITE PLAN AND PAVING PLAN

SHEET C-2 OF 110 SHEETS

JOB No. FILE No.

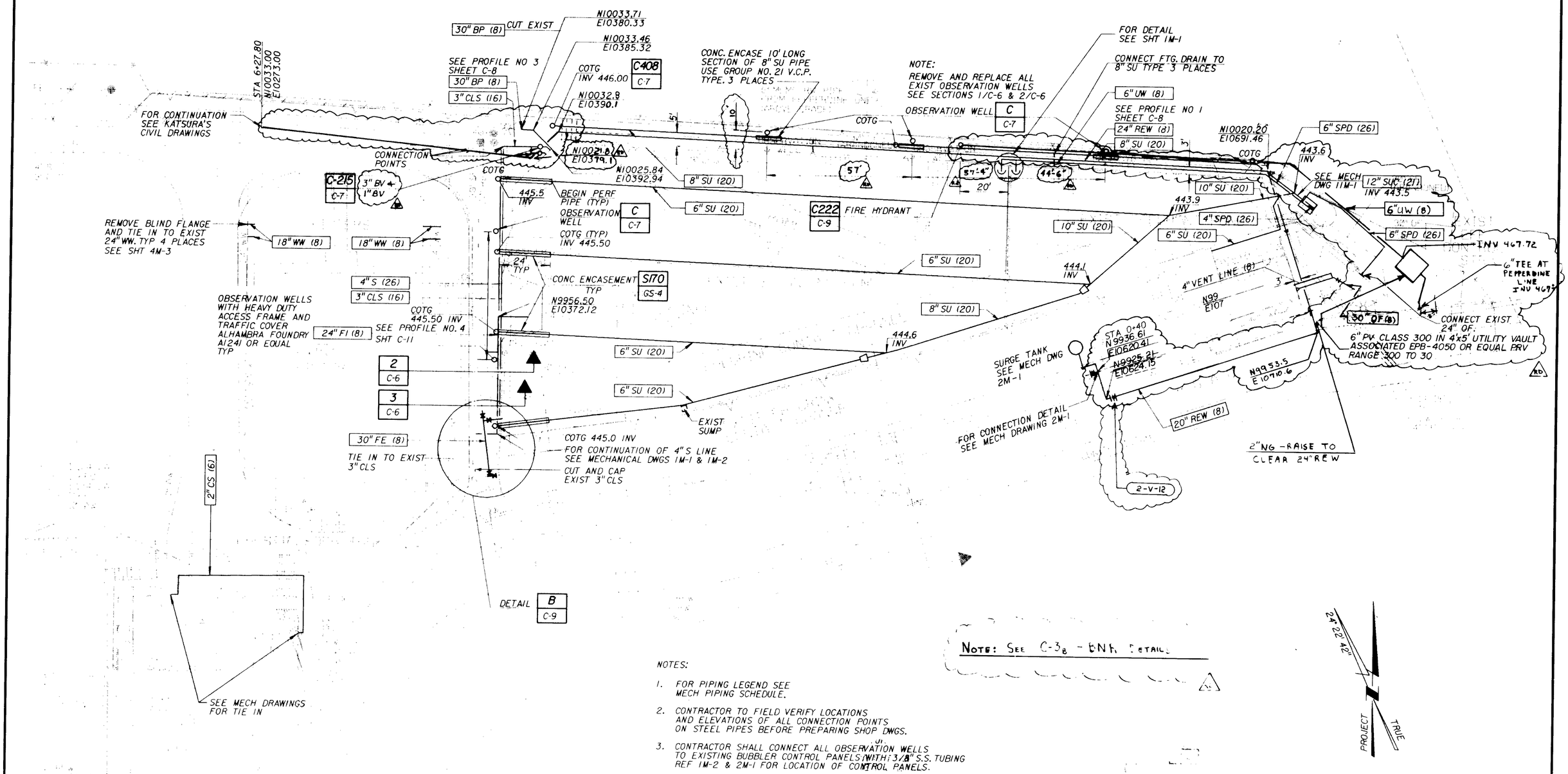

NOTES:

1. FOR PIPING LEGEND SEE MECH PIPING SCHEDULE.
2. CONTRACTOR TO FIELD VERIFY LOCATIONS AND ELEVATIONS OF ALL CONNECTION POINTS ON STEEL PIPES BEFORE PREPARING SHOP DWGS.
3. CONTRACTOR SHALL CONNECT ALL OBSERVATION WELLS TO EXISTING BUBBLER CONTROL PANELS WITH 3/8" S.S. TUBING REF 1M-2 & 2M-1 FOR LOCATION OF CONTROL PANELS.
4. CONTRACTOR TO USE CAUTION NOT TO DAMAGE 8" SU LINE WHEN INSTALLING OBSERVATION WELLS.
5. ALL 6" UW LINE SHALL BE CLASS 300 WELDED STEEL PIPE.
6. PROVIDE MINIMUM 3' COVER ON PIPES.
7. PROVIDE DRAIN ROCK WITH FILTER FABRIC (MIRAFI 140N OR EQUAL) UNDERNEATH THE ENTIRE AREAS OF THE BALANCING POND, EFFLUENT POND AND ASSOCIATED STRUCTURES.
8. THE LOCATION OF UNDERGROUND PIPELINES AND UTILITIES INDICATED WERE OBTAINED FROM AVAILABLE LVMWD RECORDS.
9. CONTRACTOR TO PROVIDE 3 TEST STATIONS REF STD DWGS C AND D ON C-9, LOCATIONS TO BE ESTABLISHED BY A CORROSION ENGINEER ON THE 24" REW PIPELINE.

04681

FOR CONSTRUCTION DOCUMENT
C
F
DATE 1-19-99 BY

REGISTERED PROFESSIONAL ENGINEER
WALTER H. LEWIS
NO. 19184
EXP. 9-30-95
CIVIL
STATE OF CALIFORNIA

REV	DATE	BY	DESCRIPTION
RD	1-19-99		Insert As-built Dimensions
RD	1-19-99		Change Pipe Alignment REW, UW, SPD cls, S

SCALE: 1"=20'

WARNING: 0 1/2 1 — IF THIS BAR DOES NOT MEASURE 1" THEN DRAWING IS NOT TO SCALE.

DESIGNED
DRAWN
CHECKED

SUBMITTED
PROJECT ENGINEER — R. C. E. NO. 41019 — DATE 11/26/90
JAMES M. MONTGOMERY CONSULTING ENGINEERS, INC. — R. C. E. NO. 32699 — DATE 11/26/90

JMM James M. Montgomery Consulting Engineers Inc.
Pasadena, California

APPROVED — DATE
APPROVED — DATE

LAS VIRGENES MWD / TRIUNFO CSD
TAPIA WRF - REGIONAL FACILITIES EXPANSION IV
FILTRATION / DISINFECTION ADDITION
YARD PIPING

SHEET C-3A OF 110 SHEETS

JOB No. FILE No.

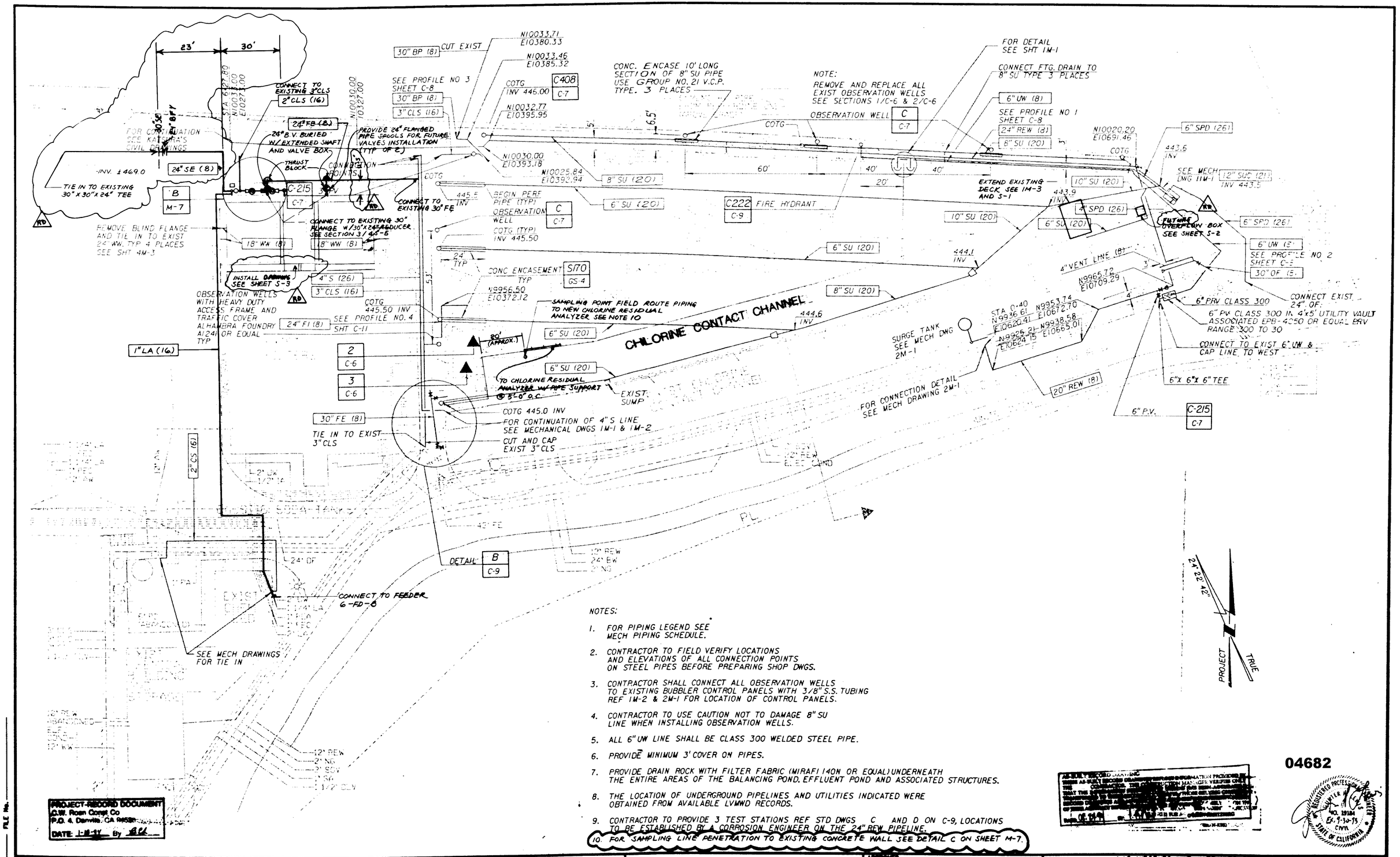

NOTES:

1. FOR PIPING LEGEND SEE MECH PIPING SCHEDULE.
2. CONTRACTOR TO FIELD VERIFY LOCATIONS AND ELEVATIONS OF ALL CONNECTION POINTS ON STEEL PIPES BEFORE PREPARING SHOP DWGS.
3. CONTRACTOR SHALL CONNECT ALL OBSERVATION WELLS TO EXISTING BUBBLER CONTROL PANELS WITH 3/8" S.S. TUBING REF 1M-2 & 2M-1 FOR LOCATION OF CONTROL PANELS.
4. CONTRACTOR TO USE CAUTION NOT TO DAMAGE 8" SU LINE WHEN INSTALLING OBSERVATION WELLS.
5. ALL 6" UW LINE SHALL BE CLASS 300 WELDED STEEL PIPE.
6. PROVIDE MINIMUM 3' COVER ON PIPES.
7. PROVIDE DRAIN ROCK WITH FILTER FABRIC (MIRAFI 140N OR EQUAL) UNDERNEATH THE ENTIRE AREAS OF THE BALANCING POND, EFFLUENT POND AND ASSOCIATED STRUCTURES.
8. THE LOCATION OF UNDERGROUND PIPELINES AND UTILITIES INDICATED WERE OBTAINED FROM AVAILABLE LVMWD RECORDS.
9. CONTRACTOR TO PROVIDE 3 TEST STATIONS REF STD DWGS C AND D ON C-9, LOCATIONS TO BE ESTABLISHED BY A CORROSION ENGINEER ON THE 24" REW PIPELINE.
10. FOR SAMPLING LINE PENETRATION TO EXISTING CONCRETE WALL SEE DETAIL C ON SHEET M-7.

PROJECT-RECORD DOCUMENT
C.W. Roen Const Co
P.O. 4, Danville, CA 94526
DATE: 1-18-91 By

AS-BUILT RECORD DRAWING

04682

REGISTERED PROFESSIONAL ENGINEER NO. 19184 EX. 9-30-95 CIVIL STATE OF CALIFORNIA

REV	DATE	BY	DESCRIPTION
1	1-18-91	GFD	Bids Work

SCALE: 1"=20'

WARNING: 0 ½ 1 — IF THIS BAR DOES NOT MEASURE 1" THEN DRAWING IS NOT TO SCALE.

DESIGNED
DRAWN
CHECKED

Submitted: George W. Roen — 41019 — 11/20/90 (R.C.E. NO. / DATE)
PROJECT ENGINEER
Approved: Robert A. Montgomery — 33099 — 11/20/90 (R.C.E. NO. / DATE)
ROBERT A. MONTGOMERY, CONSULTING ENGINEERS, INC.

JMM James M. Montgomery Consulting Engineers, Inc. Pasadena, California

APPROVED: DISTRICT APPROVAL ON COVERSHEET — DATE
APPROVED — DATE

LAS VIRGENES MWD / TRUMPO CSD
TAPIA WRF - REGIONAL FACILITIES EXPANSION IV
FILTRATION / DISINFECTION ADDITION

YARD PIPING

SHEET C-3B OF 110 SHEETS

JOB No. FILE No.

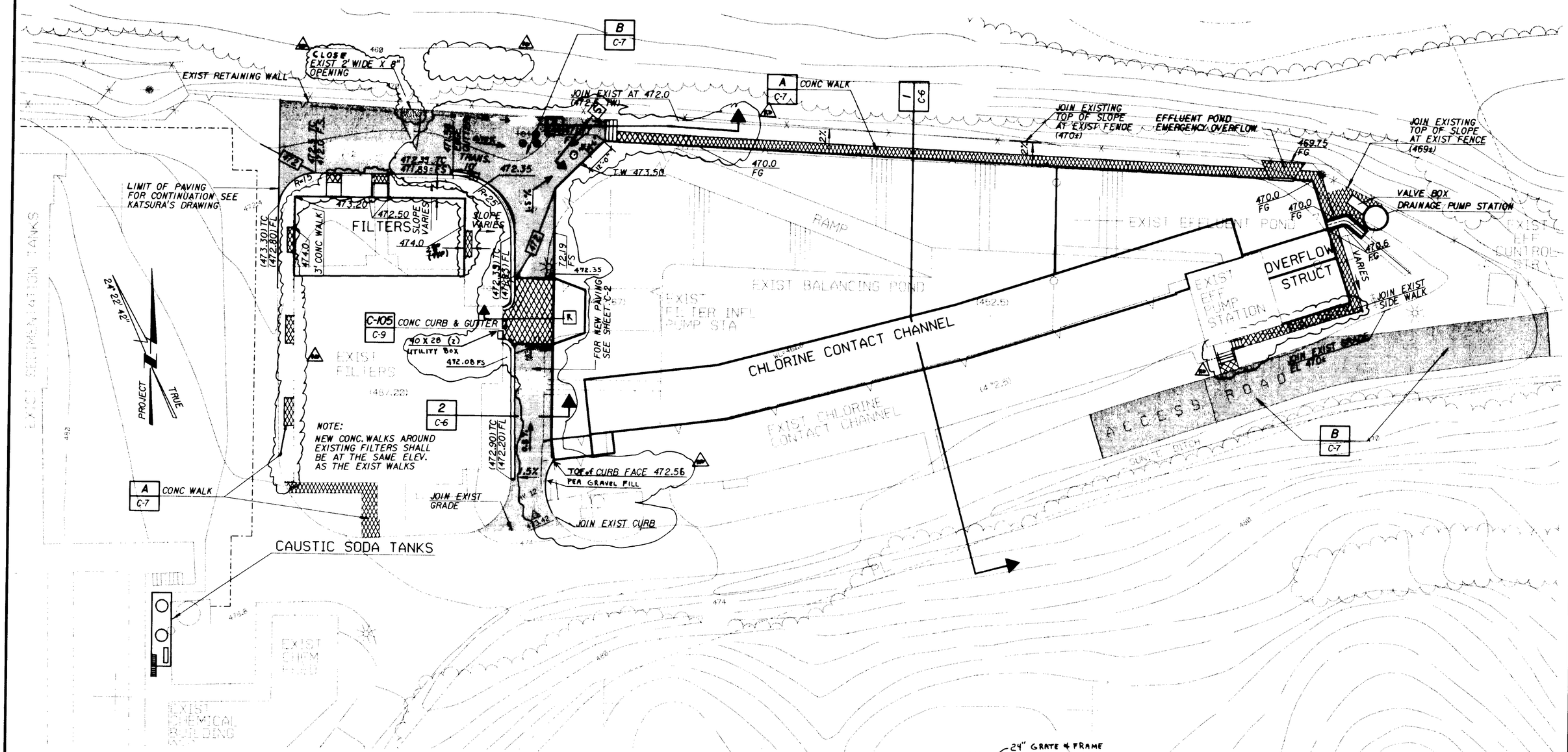

04683

PROJECT RECORD DOCUMENT
C.W. Fleur Const Co
P.O. Box Danville CA 94526
DATE 1-18-94 By BEI

REV	DATE	BY	DESCRIPTION
RD	1-18-94	BEI	Add Catch Basin
RD	[illegible]	BEI	As-Built Sidewalk + Road Grades

SCALE: 1"=20'

WARNING: 0 ½ 1 — IF THIS BAR DOES NOT MEASURE 1" THEN DRAWING IS NOT TO SCALE.

DESIGNED G. Hernandez
DRAWN F. Montgomery
CHECKED [illegible]

SUBMITTED Gerald M. Raeen — PROJECT ENGINEER — 41019 R. C. E. NO. — 11/26/90 DATE
[illegible] — JAMES M. MONTGOMERY CONSULTING ENGINEERS, INC. — 33699 R. C. E. NO. — 11/26/90 DATE

JMM James M. Montgomery Consulting Engineers, Inc. Pasadena, California

APPROVED DISTRICT APPROVAL ON COVERSHEET — DATE
APPROVED — DATE

LAS VIRGENES MWD / TRIUNFO CSD
TAPIA WRF - REGIONAL FACILITIES EXPANSION IV
FILTRATION / DISINFECTION ADDITION

GRADING

SHEET C-4 OF 100 SHEETS

FILE No.
JOB No.

01-24-94 P.O.

REGISTERED PROFESSIONAL ENGINEER — GERALD M. RAEEN — NO. 19184 — EXP. 9-30-93 — CIVIL — STATE OF CALIFORNIA

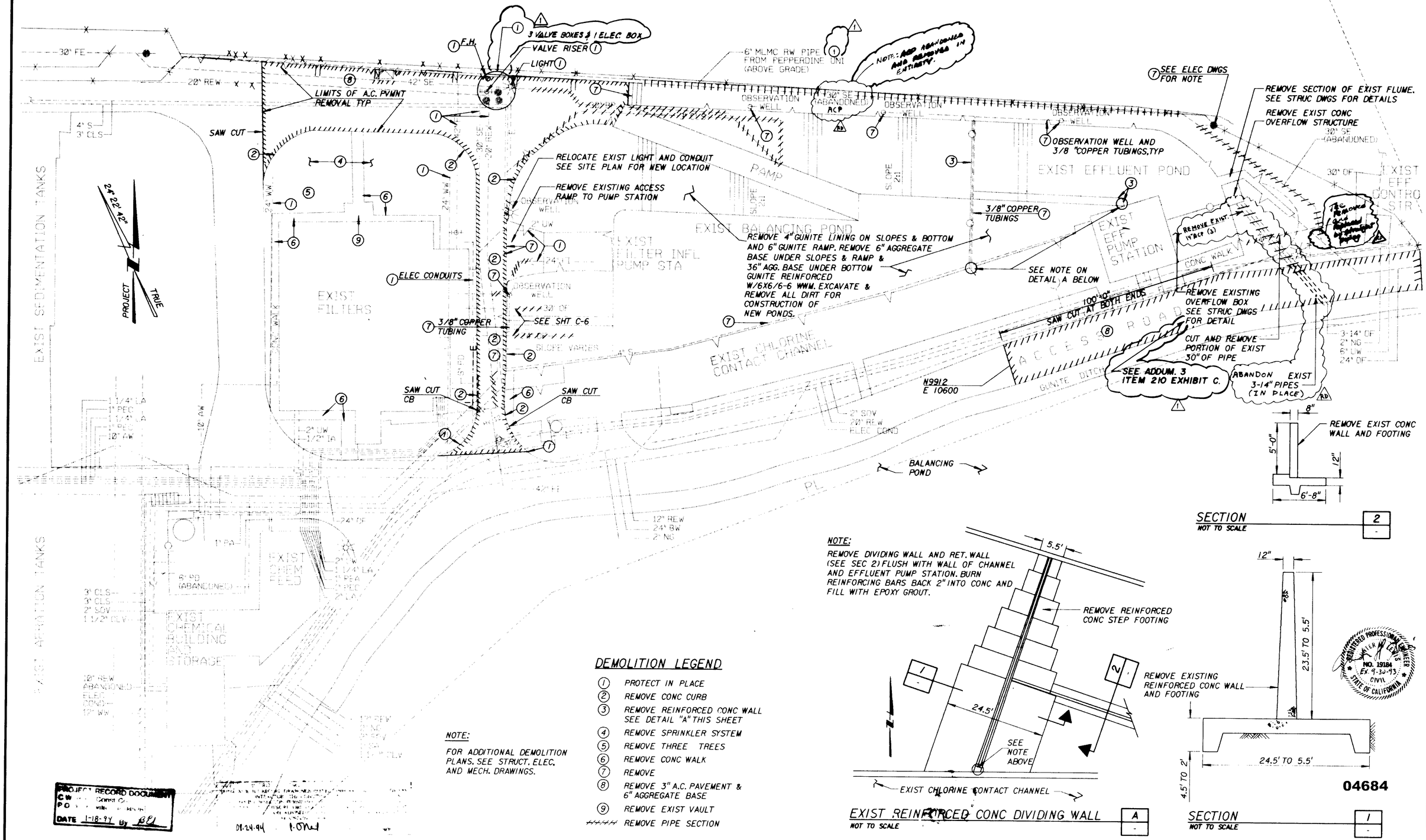

DEMOLITION LEGEND

1. PROTECT IN PLACE
2. REMOVE CONC CURB
3. REMOVE REINFORCED CONC WALL SEE DETAIL "A" THIS SHEET
4. REMOVE SPRINKLER SYSTEM
5. REMOVE THREE TREES
6. REMOVE CONC WALK
7. REMOVE
8. REMOVE 3" A.C. PAVEMENT & 6" AGGREGATE BASE
9. REMOVE EXIST VAULT

REMOVE PIPE SECTION

NOTE:

FOR ADDITIONAL DEMOLITION PLANS. SEE STRUCT. ELEC. AND MECH. DRAWINGS.

PROJECT RECORD DOCUMENT
CW Joint Co
PO
DATE 1-18-94 By BEI

REV	DATE	BY	DESCRIPTION
RD	1-14-94	RCC	ACP - Abandonment at Gate
1	4.24.91	M.B.J.	AS BID

SCALE: 1"=20'

WARNING: 0 1/2 1 — IF THIS BAR DOES NOT MEASURE AS SHOWN DRAWING IS NOT TO SCALE.

DESIGNED
DRAWN
CHECKED

SUBMITTED
PROJECT ENGINEER — 41019 R. C. E. NO. — 11/26/90 DATE
JAMES M. MONTGOMERY CONSULTING ENGINEERS, INC. — 33699 R. C. E. NO. — 11/26/90 DATE

JMM James M. Montgomery Consulting Engineers, Inc.
Pasadena, California

APPROVED — APPROVAL ON COVER — DATE
APPROVED — DATE

LAS VIRGENES MWD / TRIUNFO CSD
TAPIA WRF - REGIONAL FACILITIES EXPANSION IV
FILTRATION & DISINFECTION ADDITION

DEMOLITION PLAN

SHEET C-5 OF 100 SHEETS

JOB No. FILE No.

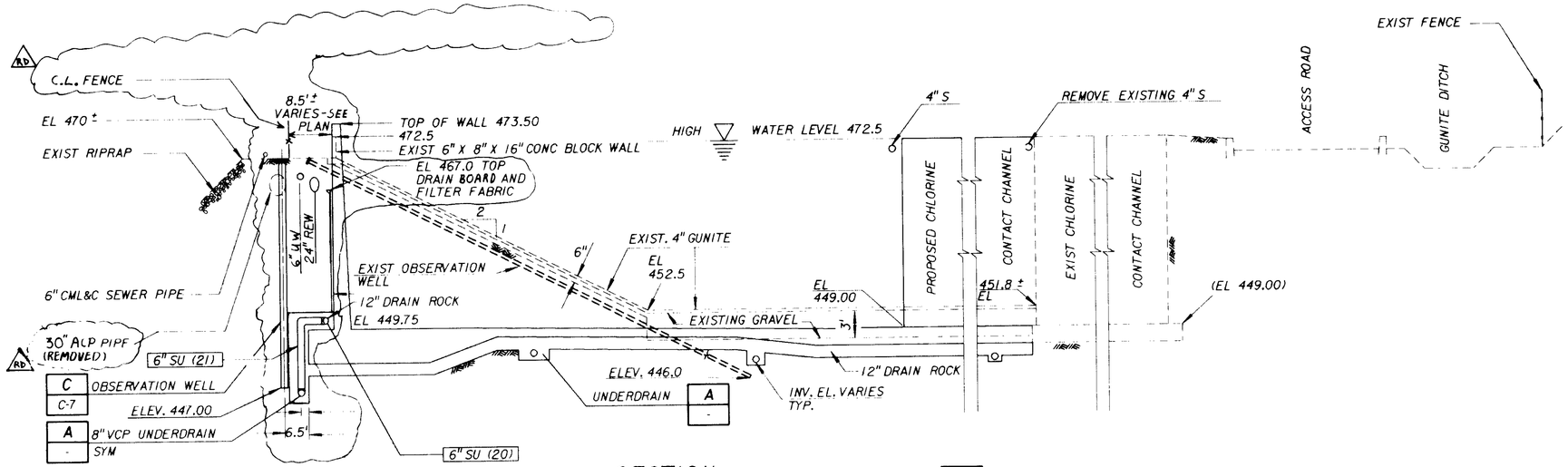

SECTION 1 (C-2, C-4)
NOT TO SCALE

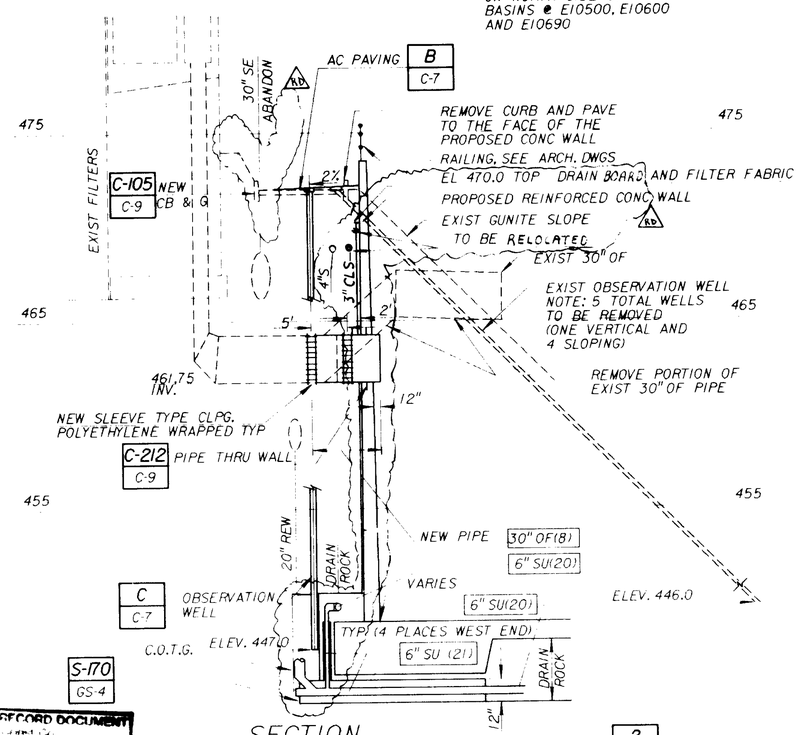

SECTION 2 (C-2, C-4, C-3)
SCALE: H: 1" = 10', V: 1" = 4'

NOTE TO CONTRATOR:

1. PROVIDE DRAIN ROCK WITH FILTER FABRIC MIRAFI 140 N OR EQUAL UNDERNEATH THE ENTIRE AREAS OF THE BALANCING POND, EFFLUENT POND, CHLORINE CONTACT CHANNEL AND ASSOCIATED STRUCTURES.
2. PROVIDE DRAIN ROCK WITH FILTER FABRIC MIRAFI 140 N OR EQUAL ALONG THE OUTSIDE WALLS OF THE BALANCING POND, EFFLUENT POND, CHLORINE CONTACT CHANNEL AND ASSOCIATED STRUCTURES TO THE ELEVATION SHOWN.

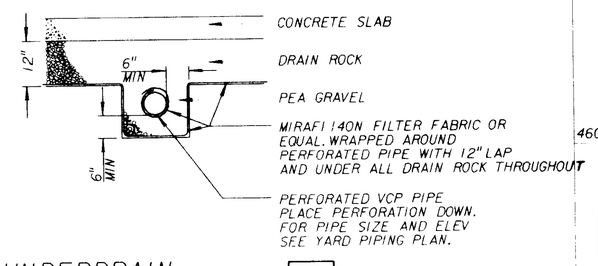

UNDERDRAIN A
NOT TO SCALE

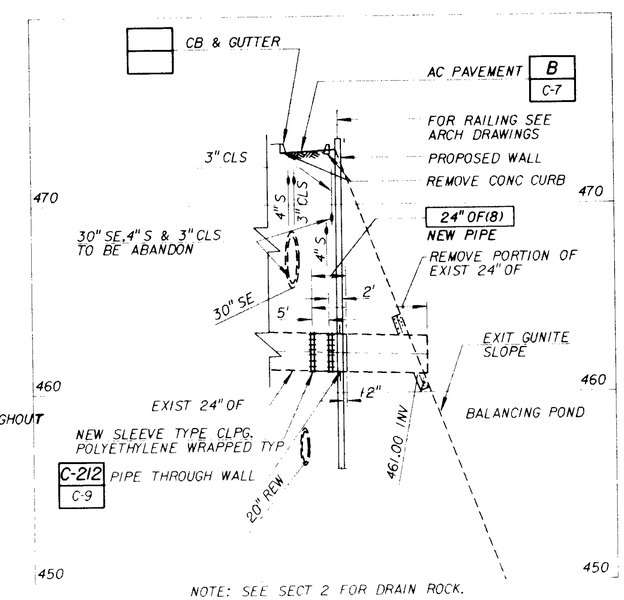

NOTE: SEE SECT 2 FOR DRAIN ROCK.

SECTION 3 (C-3)
SCALE: H: 1" = 20', V: 1" = 4'

04685

REV	DATE	BY	DESCRIPTION
RD	1-14-94		C.L. FENCE / CB. WELLS
RD	1-14-94		4"S + 3"CLS
RD	1-14-94	BES	DRAIN BOARD ON WALL

SCALE: AS NOTED

WARNING: 0 1/2 1 — IF THIS BAR DOES NOT MEASURE 1" THEN DRAWING IS NOT TO SCALE.

DESIGNED / DRAWN / CHECKED

SUBMITTED — PROJECT ENGINEER 41019 R. C. E. NO. 11/26/90 DATE
JAMES M. MONTGOMERY CONSULTING ENGINEERS, INC. 33699 R. C. E. NO. 11/26/90 DATE

JMM James M. Montgomery Consulting Engineers, Inc. Pasadena, California

APPROVED — DATE
APPROVED — DATE

SAN GORGONIO PASS WATER AGENCY
SAN GORGONIO PASS WATER AGENCY / TRIUNFO CSD
TAPIA WRF - REGIONAL FACILITIES EXPANSION IV
FILTRATION / DISINFECTION ADDITION

SECTIONS AND DETAILS

SHEET C-6 OF 110 SHEETS

FILE No. ____ JOB No. ____

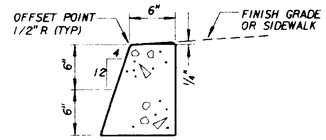

NOTE:

1. EXPANSION JOINTS OF ONE-HALF INCH RIGID BITUMINOUS MATERIAL SHALL BE PLACED AT ALL B.C.'S AND E.C.'S AND AT MAXIMUM 50-FEET SPACING.
2. MATCH SCOURING AND COLOR OF EXISTING CURBING AROUND THE FILTRATION AND DISINFECTION AREAS.

CONCRETE CURB

C-105 | JMM

NOT TO SCALE

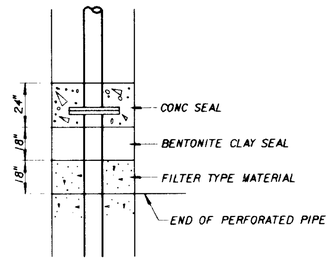

OBSERVATION WELL DETAIL

F | C-7

NOT TO SCALE

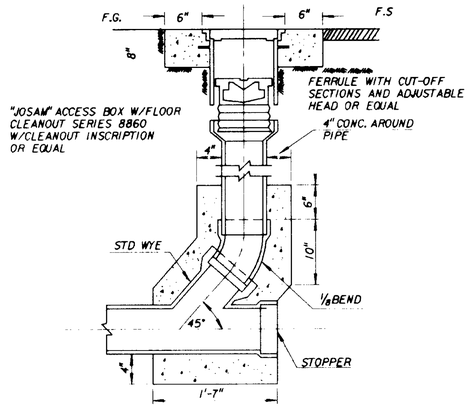

CLEANOUT

C-408 | JMM

NOT TO SCALE — REV 051588

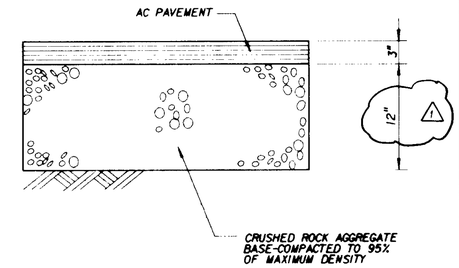

ASPHALTIC CONCRETE PAVEMENT (AC)

B | VAR

NO SCALE

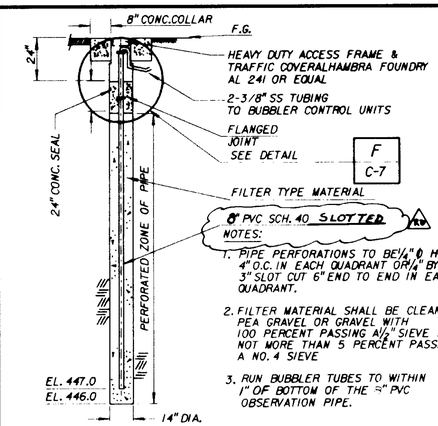

NOTES:

1. PIPE PERFORATIONS TO BE 1/4" Ø HOLES 4" O.C. IN EACH QUADRANT OR 1/4" BY 3" SLOT CUT 6" END TO END IN EACH QUADRANT.
2. FILTER MATERIAL SHALL BE CLEAN PEA GRAVEL OR GRAVEL WITH 100 PERCENT PASSING 1/2" SIEVE AND NOT MORE THAN 5 PERCENT PASSING A NO. 4 SIEVE
3. RUN BUBBLER TUBES TO WITHIN 1" OF BOTTOM OF THE 8" PVC OBSERVATION PIPE.

OBSERVATION WELL

C | VAR

NO SCALE

1. ALTERNATIVE TRENCH SECTIONS (A,B, AND C) ARE FOR USE ONLY WHERE STABLE, COMPACT SOIL CONDITIONS EXIST. WHERE BOULDERS OR LARGE CONSTRUCTIONS ARE ENCOUNTERED, THE TRENCH SECTIONS MAY BE WIDER & DEEPER THAN THAT SHOWN:
   - A. VERTICAL TRENCH WALLS - SECTION
     1. FOR DEPTHS UP TO 5 FEET, NO TRENCH SUPPORT IS REQUIRED.
     2. FOR DEPTHS EXCEEDING 5 FEET, SHORING OR SOLID SHEATHING IS REQUIRED.
   - B. SLOPING TRENCH WALLS - SECTION
     1. SLOPING TRENCH WALL SECTION SHALL NOT BE USED WITHOUT APPROVAL OF ENGINEER, UNLESS SPECIFICALLY DESIGNATED ON PLANS OR SPECIFICATIONS.
     2. EXCEPT AS APPROVED BY ENGINEER, UNSUPPORTED SLOPING TRENCH WALLS SHALL BE AS SHOWN IN SOILS REPORT.
   - C. COMBINATION OF VERTICAL AND SLOPING TRENCH WALLS - SECTION
     1. TRENCH DEPTHS NOT EXCEEDING 5 FEET SHALL HAVE VERTICAL WALLS IN PIPE ZONE UNLESS OTHERWISE APPROVED BY ENGINEER, OR WHERE SPECIFIED.
     2. FOR TRENCHES WITH COMBINED WALLS AND ANY DEPTH EXCEEDING 5 FEET, DESIGN CALCULATIONS BY A REGISTERED CIVIL ENGINEER AND APPROVAL BY GOVERNING AGENCY OF SUPPORTED METHODS ARE REQUIRED.
2. WHERE WET, UNSTABLE OR RUNNING SOIL IS ENCOUNTERED, SOLID SHEATHING IS REQUIRED FOR ALL VERTICAL TRENCH WALLS.

NOTE: TRENCH SECTIONS SHOWN DO NOT DESIGNATE PAY LINES.

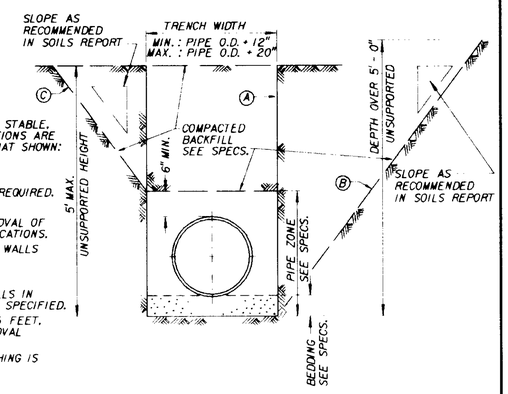

TYPICAL TRENCH SECTION

C-204 | JMM

NOT TO SCALE — REV 051588

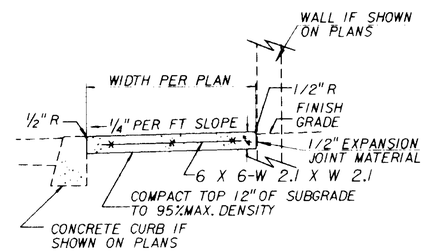

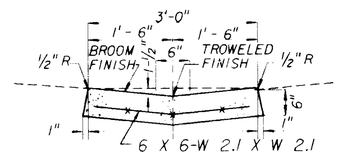

NOTES:

SIDEWALK

1. SCORE LINES AT RIGHT ANDLES TO CENTERLINE SHALL BE MARKED AT 36-INCH INTERVALS ON WALKS EXCEEDING FOUR FEET IN WIDTH, A CONTINUOUS SCORE LINE SHALL BE MARKED ON CENTERLINE.

REGISTERED PROFESSIONAL ENGINEER — JACK A. LAW — NO. 19184 — EXP. 9-30-93 — CIVIL — STATE OF CALIFORNIA

CROSS GUTTER

1. EXPANSION JOINTS OF ONE-HALF INCH BITUMINOUS MATERIAL SHALL BE PLACED AT 50-FEETSPACING AND WHERE GUTTER BUTTS OTHER CONCRETESTRUCTURES

CONCRETE SIDEWALK AND CROSS GUTTER

A | VAR

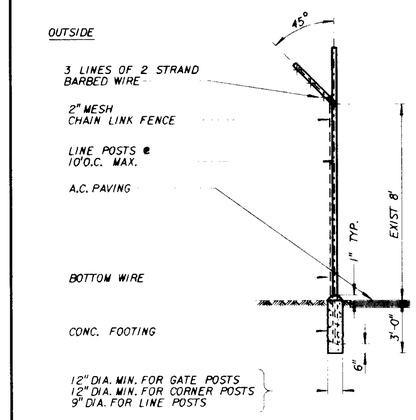

NOTE:

EXTENSION ARM MAY BE TURNED IN. AT OPTION OF OWNER.

SPECIFICATION

BARBED WIRE .....2 STRANDS OF NO. 12 1/2 STEEL WIRE WITH 4 POINT BARBS.

FABRIC .....NO. 9 GALV. STEEL WIRE. 2" MESH.

FABRIC TIES .....NO. 9 GALV. STEEL WIRE SPACED 14" APART ON POSTS AND 24" APART ON RAILS.

CORNER POST .....3" O.D. PIPE. 5.79#/FT.

LINE POSTS.....2.25" H - COLUMN SECTION. 4.1#/FT. OR STD. WEIGHT 2 1/2" O.D. PIPE. 3.65#/FT.

SWING GATE POSTS .....4" O.D. PIPE. 9.1#/FT.

TOP RAIL & BRACES .....1 5/8" O.D. PIPE. 2.27#/FT. OR 1 1/2" x 1 5/16" H - COLUMN SECTION. 2.00#/FT.

BOTTOM WIRE.....COIL SPRING WIRE 7 GA.

ALL FENCING MATERIALS...TO BE HOT - DIPPED GALVANIZED AFTER FABRICATION.

CHAIN LINK FENCE DETAIL

C-101 | JMM

NOT TO SCALE — REV 051588

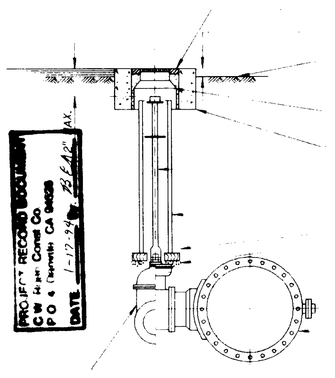

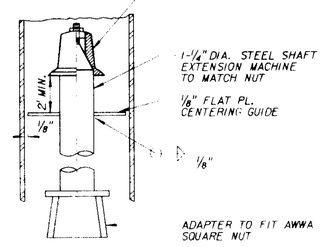

NOTES:

PROVIDE PROTECTIVE COATING TO EXTERIOR SURFACE OF VALVE BODY IN ACCORDANCE WITH SPECS.

FOR LUBRICATED PLUG VALVE, EXTEND LUBRICATION LINE TO GRADE PER MANUFACTURERS INSTRUCTIONS.

08.24.94 [illegible]

BURIED VALVE INSTALLATION

C-215 | JMM

NOT TO SCALE — REV 051588

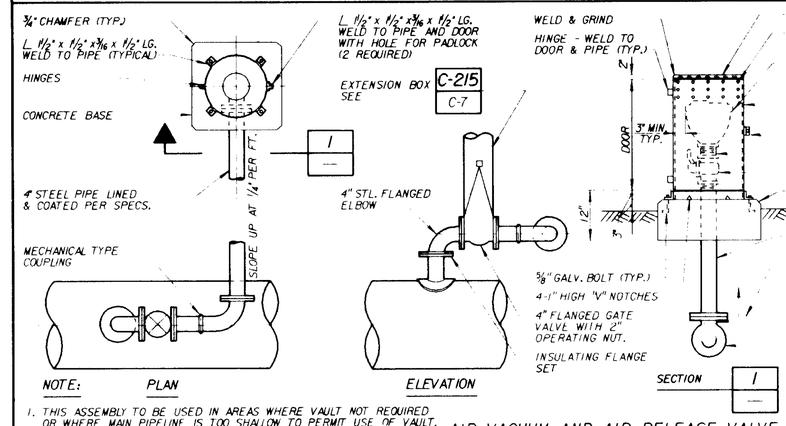

NOTE:

1. THIS ASSEMBLY TO BE USED IN AREAS WHERE VAULT NOT REQUIRED OR WHERE MAIN PIPELINE IS TOO SHALLOW TO PERMIT USE OF VAULT.
2. ALL FERROUS SURFACES OF PIPE AND APURTENANCES TO BE PROVIDED WITH PROTECTIVE COATING PER SPECS.
3. PROVIDE STAINLESS STL. NUTS, BOLTS AND WASHERS TO BURIED FLANGE, AND COUPLINGS, EXCEPT FOR NONMETALLIC WASHERS TO BE PROVIDED AS PART OF INSULATING FLANGE SET.

AIR VACUUM AND AIR RELEASE VALVE ASSEMBLY

C-221 | JMM

NOT TO SCALE — REV 051588

04686

FILE No.

JOB No.

REV	DATE	BY	DESCRIPTION
Δ	1-14-91	BES	CASING SIZE
Δ	4-29-91	M.B.J.	AS BID

SCALE: AS NOTED

WARNING: 0 1/2 1 — IF THIS BAR DOES NOT MEASURE 1" THEN DRAWING IS NOT TO SCALE.

DESIGNED [illegible] DRAWN [illegible] CHECKED [illegible]

SUBMITTED: George M. Parker, PROJECT ENGINEER — 41019, R. C. E. NO. — 11/26/90, DATE

[illegible], JAMES M. MONTGOMERY CONSULTING ENGINEERS, INC. — 32699, R. C. E. NO. — 11/26/90, DATE

JMM James M. Montgomery Consulting Engineers, Inc.
Pasadena, California

APPROVED — DATE
APPROVED — DATE

LAS VIRGENES MWD / TRIUNFO CSD
TAPIA WRF - REGIONAL FACILITIES EXPANSION IV
FILTRATION / DISINFECTION ADDITION

DETAILS

SHEET C-7 OF 110 SHEETS

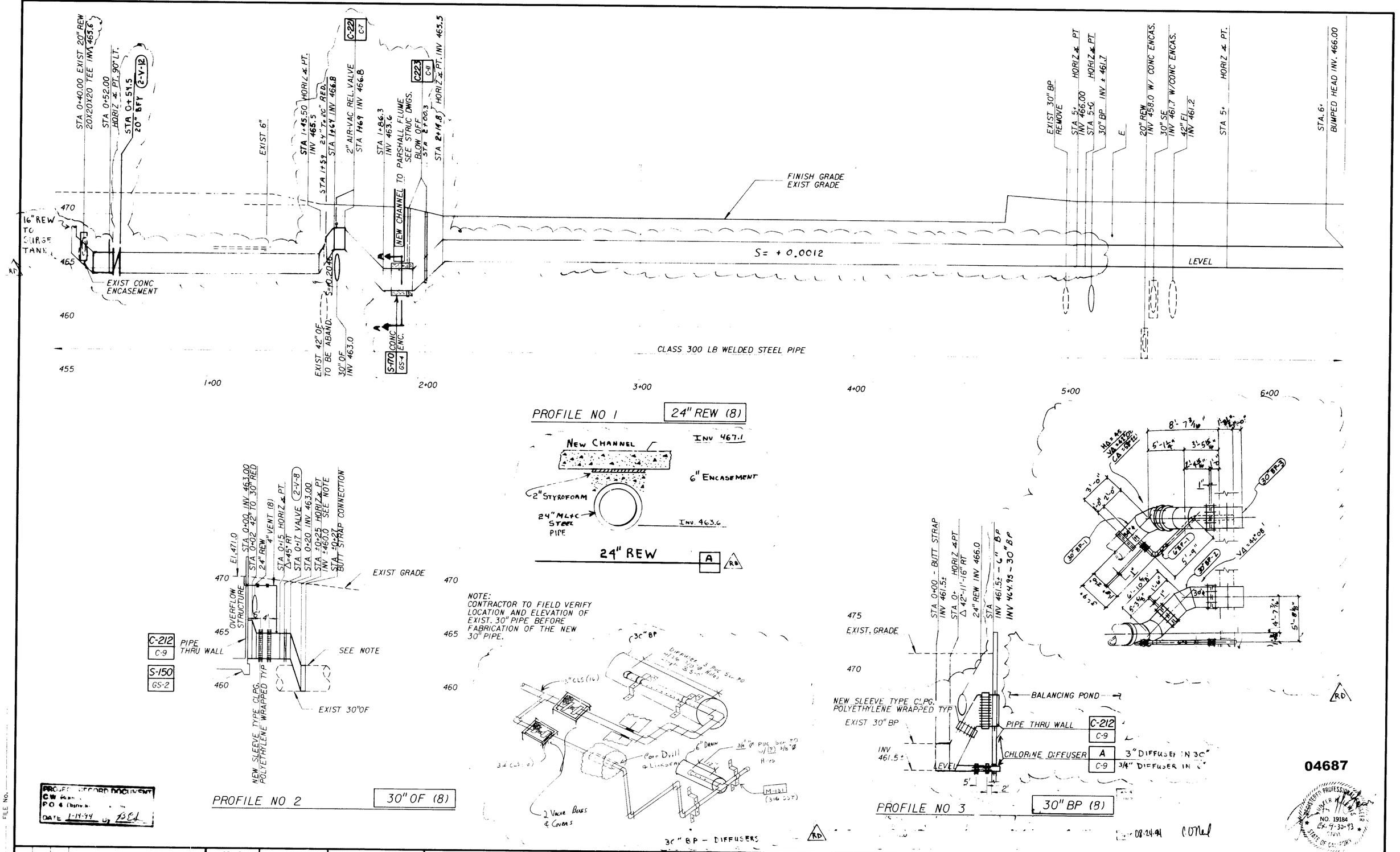

REV	DATE	BY	DESCRIPTION
RD	1-14-94	BCS	30" BP & DIFFUSER.
RD	1-14-94	BCS	20/24" REW Alignment Details

SCALE: HOR 1"=20' VER 1"=4'

WARNING: 0 1/2 1 — IF THIS BAR DOES NOT MEASURE 1" THEN DRAWING IS NOT TO SCALE.

DESIGNED
DRAWN
CHECKED

SUBMITTED
PROJECT ENGINEER — R. C. E. NO. 41019 — DATE 11/26/90
JAMES M. MONTGOMERY CONSULTING ENGINEERS, INC. — R. C. E. NO. 33699 — DATE 11/26/90

JMM James M. Montgomery Consulting Engineers, Inc.
Pasadena, California

APPROVED — DATE
APPROVED — DATE

LAS VIRGENES MWD / TRUNFO CSD
TAPIA WRP REGIONAL FACILITIES EXPANSION IV
FILTRATION / DISINFECTION ADDITION

PIPING PROFILES

SHEET C-8 OF 110 SHEETS

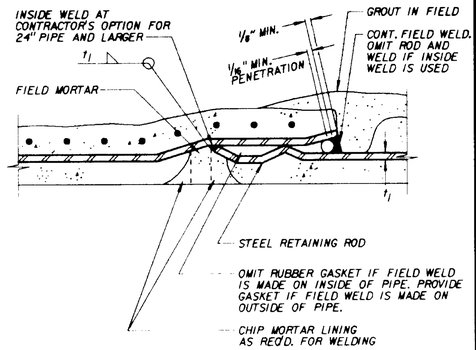

ALTERNATE FIELD WELDED JOINT — C-206C

NOT TO SCALE — REV 051588 — JMM

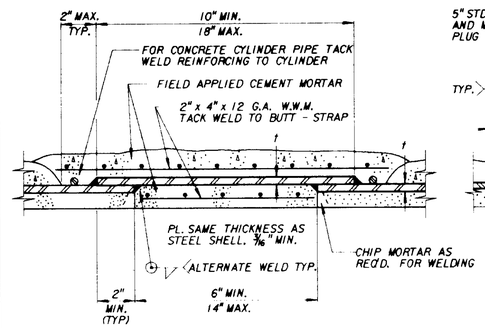

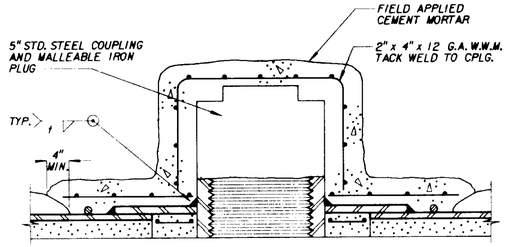

HANDHOLE

(REQUIRED ON PIPE SMALLER THAN 24" DIAMETER)

BUTT-STRAP JOINT FOR STEEL CYLINDER, CONCRETE PIPE, STEEL PIPE MORTAR LINED AND COATED, AND WELDED STEEL PIPE — C-208

NOT TO SCALE — REV 051588 — JMM

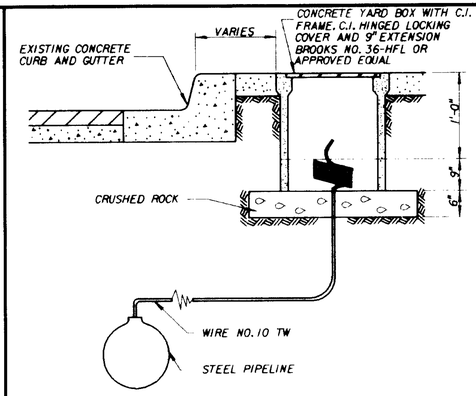

CATHODIC PROTECTION TEST POINT STATION FOR RECORDER INSTALLATIONS — C / C-3

NTS

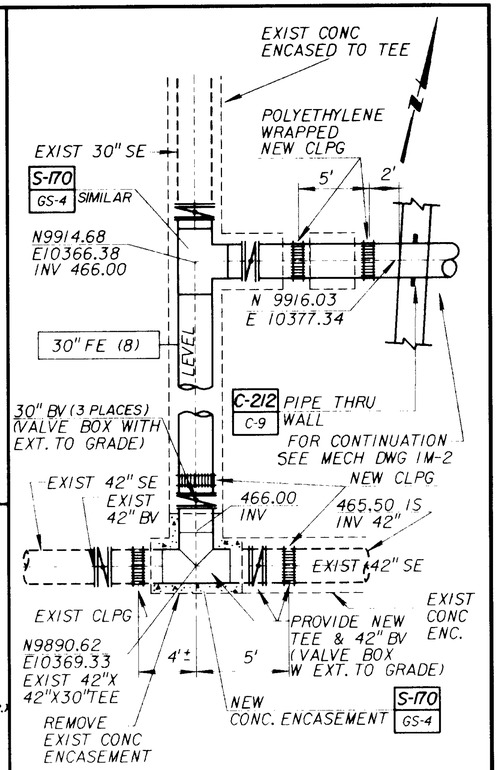

NOTE:

1. REMOVAL AND INSTALLATION OF TEE AND VALVES SHALL BE MADE IN MAXIMUM FOUR HOURS.
2. FOR OTHER PIPING CROSSING IN THIS AREA SEE SHEET C-3.

PIPING DETAIL — B / C-3

NOT TO SCALE

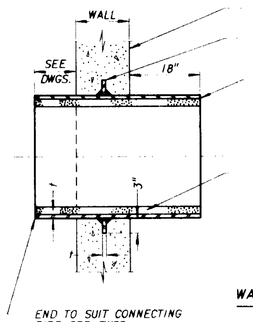

WALL FLANGE PLATE THICKNESS

PIPE SIZE	STEEL PLATE
30 " & UNDER	1/4"
31" TO 60"	5/16"
61" & OVER	3/8"

STEEL PIPE THRU OR TERMINATING AT WALL — C-212

NOT TO SCALE — REV 051588 — JMM

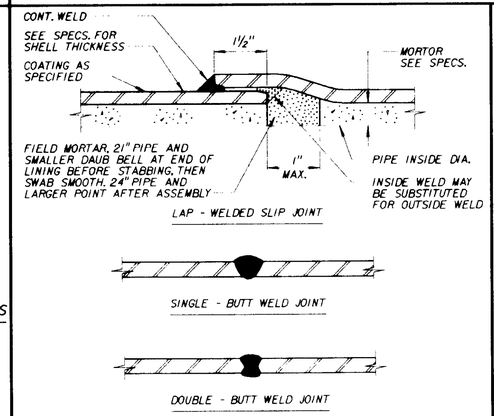

WELDED STEEL PIPE — C-207

NOT TO SCALE — REV 051588 — JMM

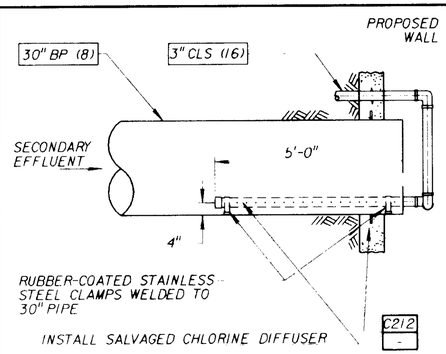

CHLORINE DIFFUSER — A / -

NOT TO SCALE

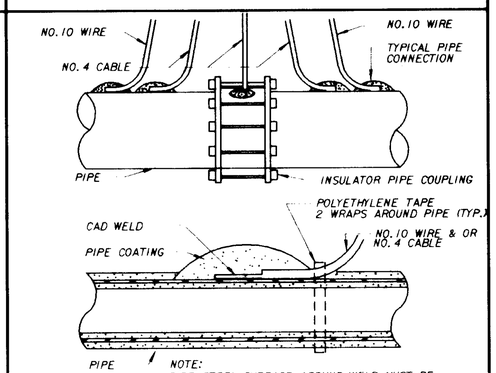

NOTE:
PIPE STEEL SURFACE AROUND WELD MUST BE SCRAPED AND BRUSH CLEANED TO PROVIDE A SOUND, CLEAN, DRY, METAL SURFACE FOR CAD WELD.

TYPICAL DETAILS FOR CATHODIC PROTECTION TEST LEADS — D / C-3

NTS

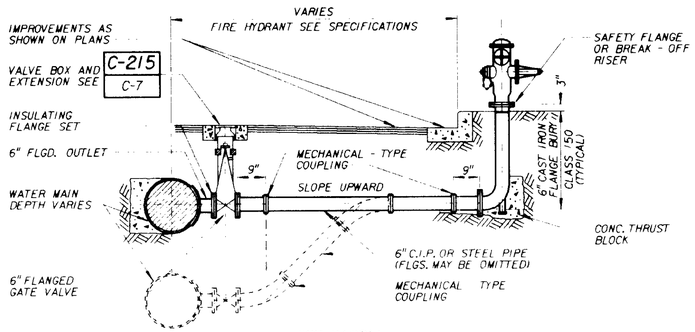

WET BARREL

PROJECT RECORD DOCUMENT
C.W. Hunt Const. Co.
P.O. & Danville CA Ditch
DATE 1-18-94 BY RR

NOTES:

1. ALL FERROUS SURFACES OF PIPE AND APPURTENANCES TO BE PROVIDED WITH PROTECTIVE COATINGS PER SPECS.
2. PROVIDE STAINLESS STEEL NUTS, BOLTS AND WASHERS TO BURIED FLANGES AND COUPLINGS. EXCEPT FOR NONMETALIC WASHERS WASHERS TO BE PROVIDED AR PART OF INSULATING FLANGE SET.
3. CLASS 300 PIPE SHALL BE PROVIDED.

FIRE HYDRANT LATERAL — C-222

NOT TO SCALE — REV 051588 — JMM

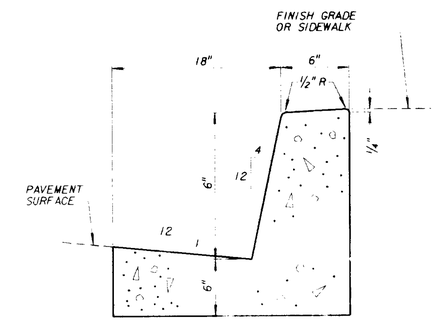

NOTE:
MATCH SCOURING AND COLOR OF EXISTING CURB AND GUTTER AROUND THE FILTRATION & DISINFECTION AREAS.

CONCRETE CURB AND GUTTER — C-105

NOT TO SCALE — REV 051588 — JMM

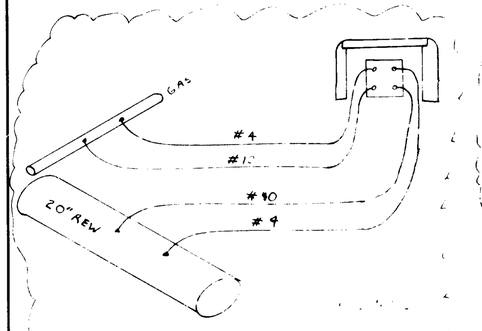

TEST STATION GAS LINE CROSSES REW

(TYP-2) NTS

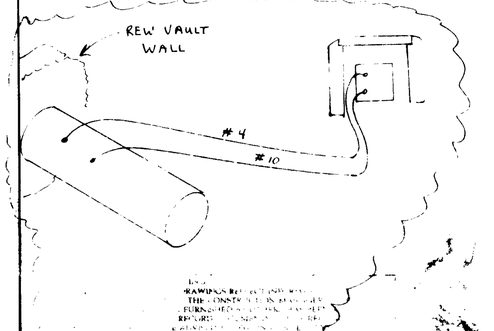

TEST STATION AT REW VAULT

NTS

04688

REV	DATE	BY	DESCRIPTION
RD	1-18-94	BEV	CATHODIC DETAILS

SCALE: AS SHOWN

WARNING: 0 1/2 1 — IF THIS BAR DOES NOT MEASURE 1" THEN DRAWING IS NOT TO SCALE.

DESIGNED G. A. Dunnage
DRAWN F. Martinez
CHECKED M. Davis

SUBMITTED
PROJECT ENGINEER — 41019 R. C. E. NO. — 11/26/90 DATE
JAMES M. MONTGOMERY CONSULTING ENGINEERS, INC. — 33699 R. C. E. NO. — 11/26/90 DATE

JMM James M. Montgomery Consulting Engineers, Inc.
Pasadena, California

APPROVED — DATE
APPROVED

LAS VIRGENES MWD / TRUNPO ESD
TAPIA WRF - REGIONAL FACILITIES EXPANSION IV
FILTRATION / DISINFECTION ADDITION

DETAILS

SHEET C-8

JOB No. — FILE No.

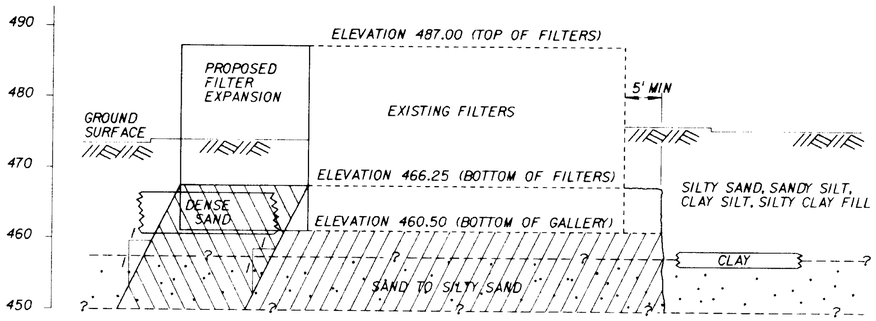

POTENTIALLY LIQUEFIABLE SOILS

---- ? ---- INTERPRETED GEOLOGICAL CONTACT

SOILS TO BE IMPROVED BY COMPACTION GROUTING

SOILS TO BE REMOVED AND RECOMPACTED WITH STRUCTURAL FILL

SECTION 4 / C-2

NOT TO SCALE

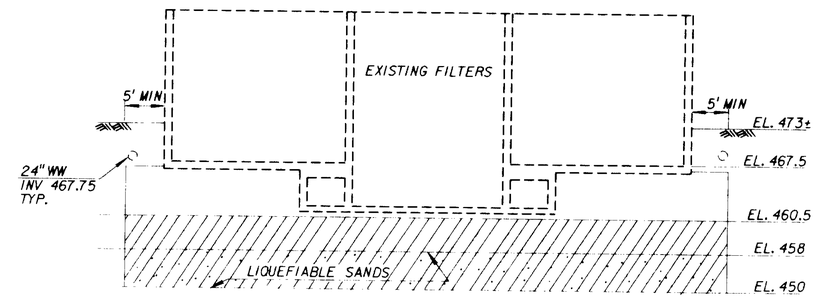

SOILS TO BE IMPROVED BY COMPACTION GROUTING

SECTION 5 / C-2

NOT TO SCALE

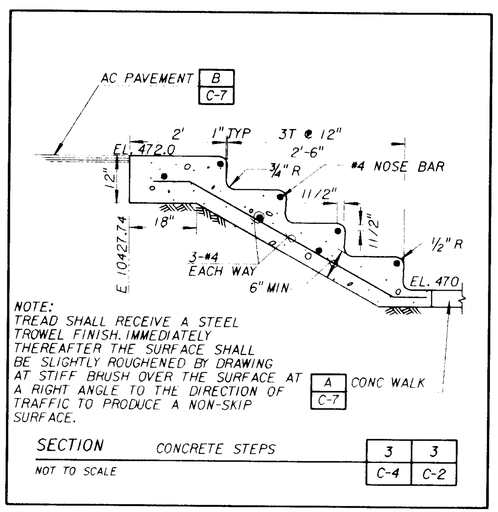

SECTION CONCRETE STEPS 3 / C-4 — 3 / C-2

NOT TO SCALE

NOTE TO CONTRACTOR:

1. FOR THE CONSTRUCTION OF THE BALANCING POND AND EFFLUENT POND, THE CONTRACTOR'S ACTIVITIES SHALL NOT BE ALLOWED TO EXTEND OUTSIDE OF THE FENCE LINE. ALL WORK MUST BE DONE INSIDE OF THE FENCE. THE NORTHERN PORTION OF THE EXCAVATION FOR THE PONDS MAY INVOLVE DIFFICULT SHORING. THE SHORING SYSTEM SELECTION AND DESIGN SHALL BE THE RESPONSIBILITY OF THE CONTRACTOR WHO SHALL SUBMIT IT TO THE ENGINEER; HOWEVER, A CONCEPTUAL SHORING SCHEMATIC IS PRESENTED (IN DETAIL AT RIGHT) ONLY TO INDICATE THE GENERAL LEVEL OF DIFFICULTY. DRILLING INTO THE BEDROCK CAN BE EXPECTED TO BE DIFFICULT AND MAY REQUIRE SPECIALIZED ROCK DRILLING EQUIPMENT. THE EXTENT OF RIPRAP INTO THE SOIL SHALL BE INVESTIGATED BY THE CONTRACTOR IF TIEBACK ANCHORS ARE TO BE USED.
2. CONTRACTOR SHALL LOCATE ALL UNDERGROUND UTILITIES AND PROTECT THEM OR RELOCATE THEM BEFORE SETTING SHORING, AS DIRECTED BY THE ENGINEER.

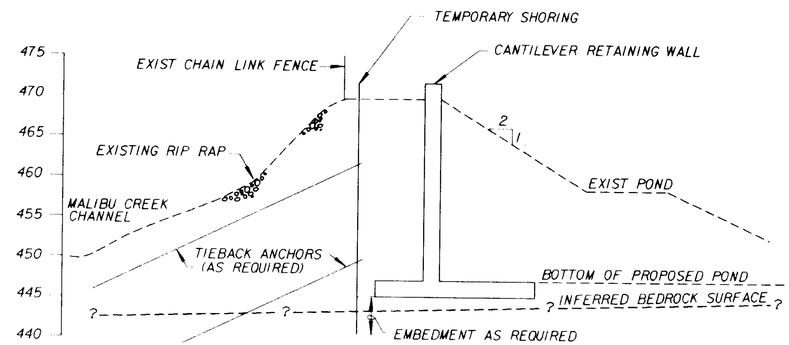

CONCEPTUAL SHORING SCHEMATIC - DETAIL A

NOT TO SCALE

04689

PROJECT RECORD DOCUMENT
C W Roen Const Co.
P O 4 Danville, CA 94526
DATE: 1-20-94 By: [illegible]

AS-BUILT RECORD DRAWING
THIS AS-BUILT RECORD DRAWING IS BEING PROVIDED BY THE CONTRACTOR THE CONTRACTOR HAS STATED THAT THE INFORMATION HEREIN WAS TRANSFERRED TO THIS RECORD DRAWING FROM RECORD DRAWINGS ARE BELIEVED TO BE ACCURATE.
04-24-94

Ex. 9-30-93

REV	DATE	BY	DESCRIPTION

SCALE: AS SHOWN

WARNING: 0 1/2 1 — IF THIS BAR DOES NOT MEASURE 1" THEN DRAWING IS NOT TO SCALE.

DESIGNED [illegible]
DRAWN [illegible]
CHECKED [illegible]

SUBMITTED: Jorge M. Racer — PROJECT ENGINEER — 41019 R. C. E. NO. — 11/26/90 DATE
JAMES M. MONTGOMERY CONSULTING ENGINEERS, INC. — 32699 R. C. E. NO. — 11/26/90 DATE

JMM James M. Montgomery Consulting Engineers, Inc. — Pasadena, California

APPROVED — DATE
APPROVED — DATE

LAS VIRGENES MWD / TRIUNFO CSD
TAPIA WRF - REGIONAL FACILITIES EXPANSION IV
FILTRATION / DISINFECTION ADDITION
SECTIONS AND DETAIL

SHEET C-10 OF 110 SHEETS

JOB NO. FILE NO.

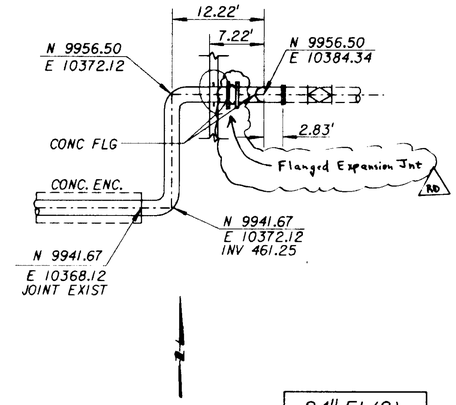

PLAN

24" FI (8)

SEE SHEET C-3

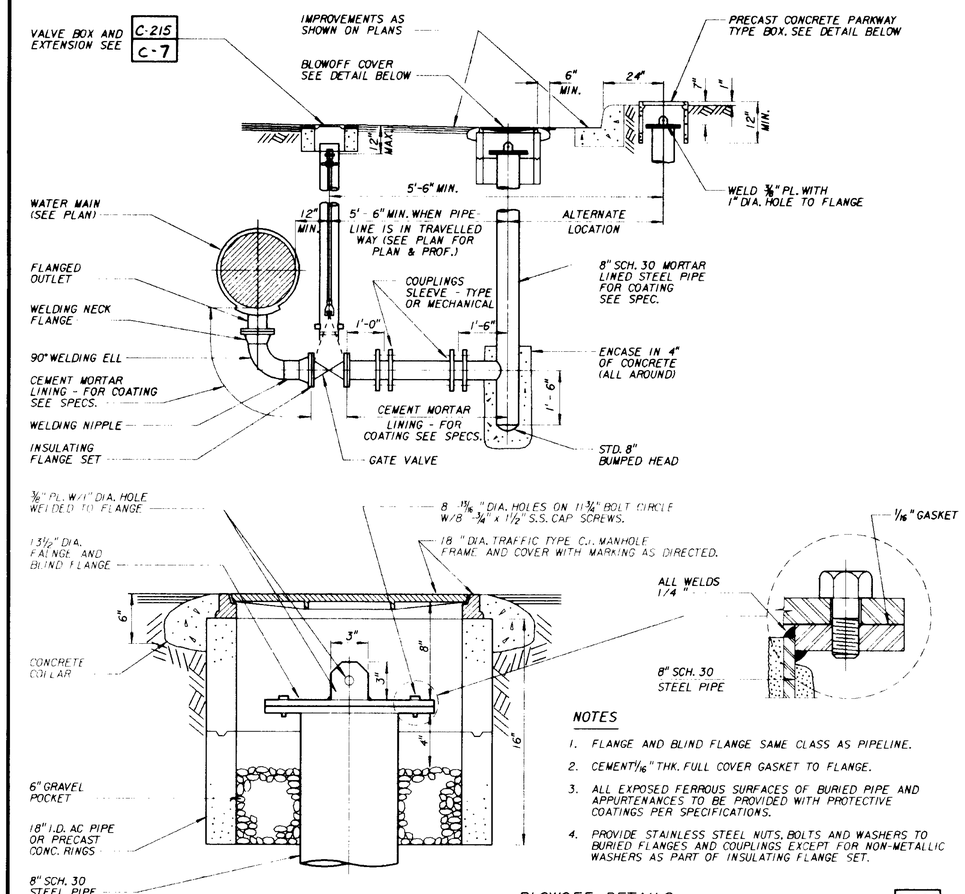

NOTES

1. FLANGE AND BLIND FLANGE SAME CLASS AS PIPELINE.
2. CEMENT 1/16" THK. FULL COVER GASKET TO FLANGE.
3. ALL EXPOSED FERROUS SURFACES OF BURIED PIPE AND APPURTENANCES TO BE PROVIDED WITH PROTECTIVE COATINGS PER SPECIFICATIONS.
4. PROVIDE STAINLESS STEEL NUTS, BOLTS AND WASHERS TO BURIED FLANGES AND COUPLINGS EXCEPT FOR NON-METALLIC WASHERS AS PART OF INSULATING FLANGE SET.

BLOWOFF DETAILS — C-223

NOT TO SCALE — 090189 — JMM

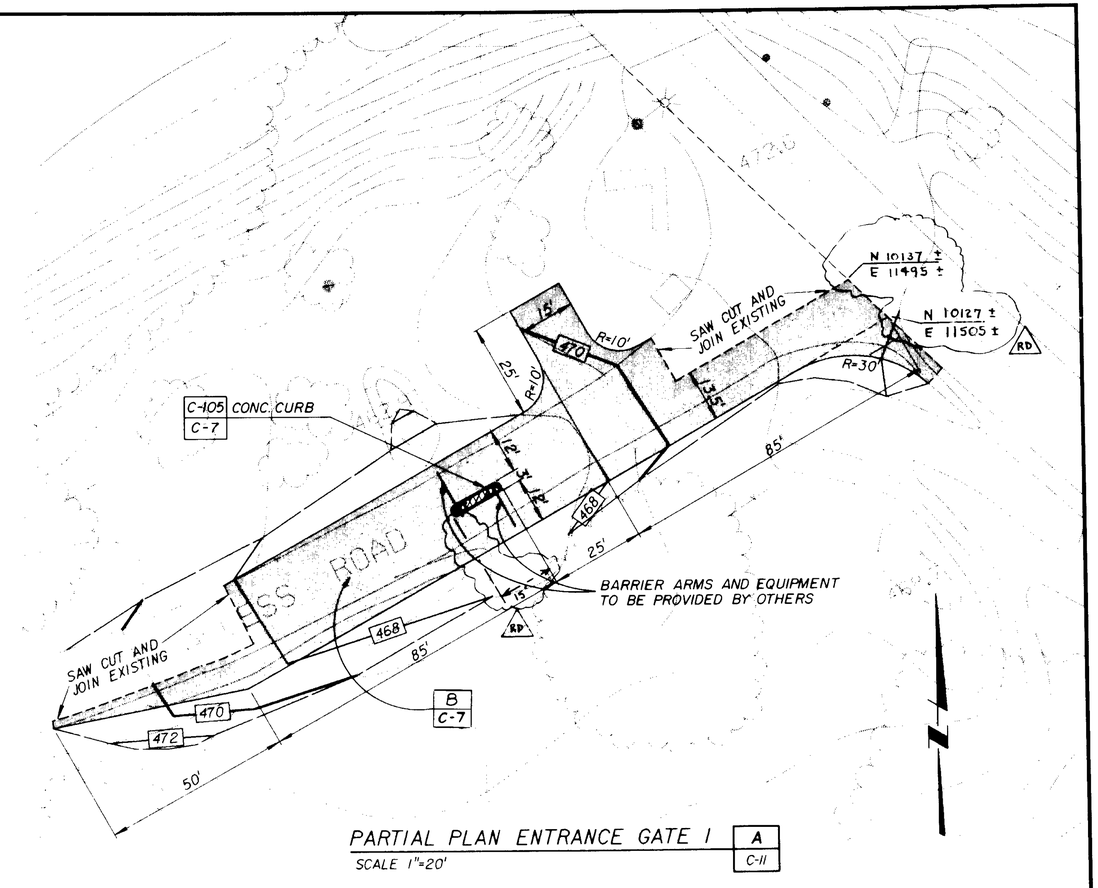

PARTIAL PLAN ENTRANCE GATE I — A / C-11

SCALE 1"=20'

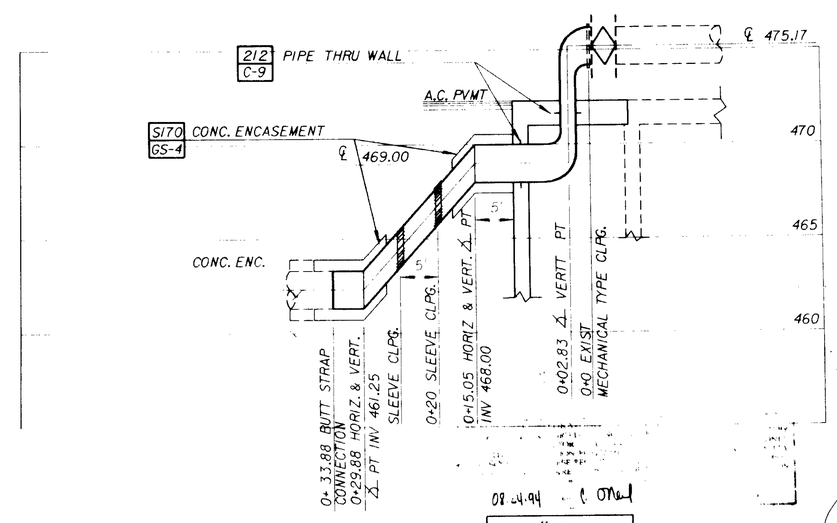

PROFILE NO. 4

24" FI (8)

04690

08-24-94

EX 9-30-93

PROJECT RECORD DOCUMENT
C.W. Roen Const Co.
P.O. & Danville, CA 94526
DATE: 1-18-94 By: [illegible]

REV	DATE	BY	DESCRIPTION
RD	1-18-94	BFS	24" FI - EXP. JNT
RD	1-18-94	BFS	Page Dimensions

SCALE: AS SHOWN

WARNING: 0 1/2 1 — IF THIS BAR DOES NOT MEASURE 1" THEN DRAWING IS NOT TO SCALE.

DESIGNED [illegible]
DRAWN [illegible]
CHECKED [illegible]

SUBMITTED: George M. Racer — PROJECT ENGINEER — R. C. E. NO. 41019 — DATE 11/26/90
[illegible] — JAMES M. MONTGOMERY CONSULTING ENGINEERS, INC. — R. C. E. NO. 33699 — DATE 11/26/90

JMM James M. Montgomery Consulting Engineers, Inc. — Pasadena, California

APPROVED: ISTRICT ENGINEER — DATE
APPROVED — DATE

LAS VIRGENES MWD / TRIUNFO CSD
TAPIA WRP - REGIONAL FACILITIES EXPANSION IV
FILTRATION / DISINFECTION ADDITION

PLANS, PROFILE AND DETAIL

SHEET C-11 OF 110 SHEETS

JOB NO. — FILE NO.

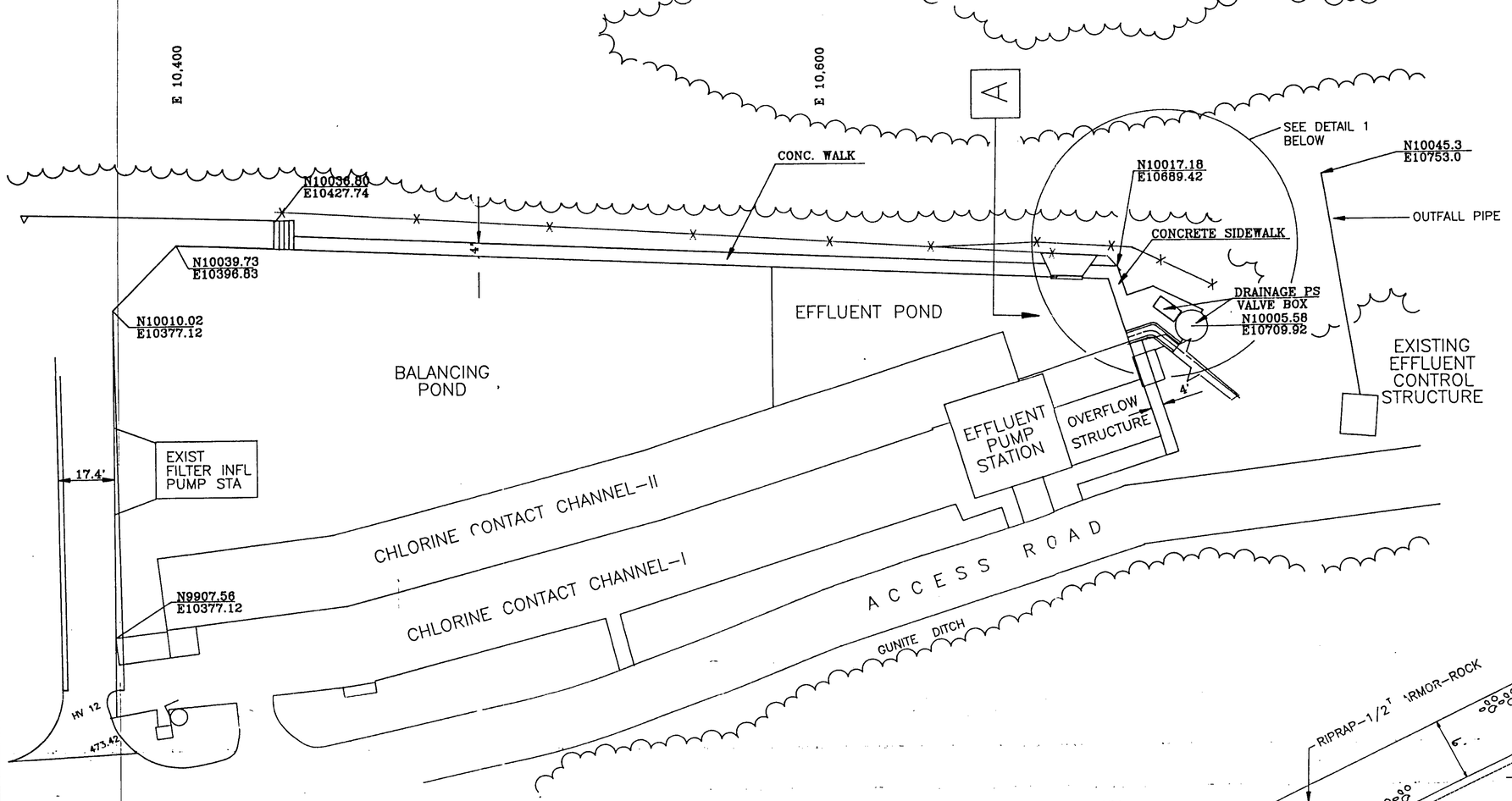

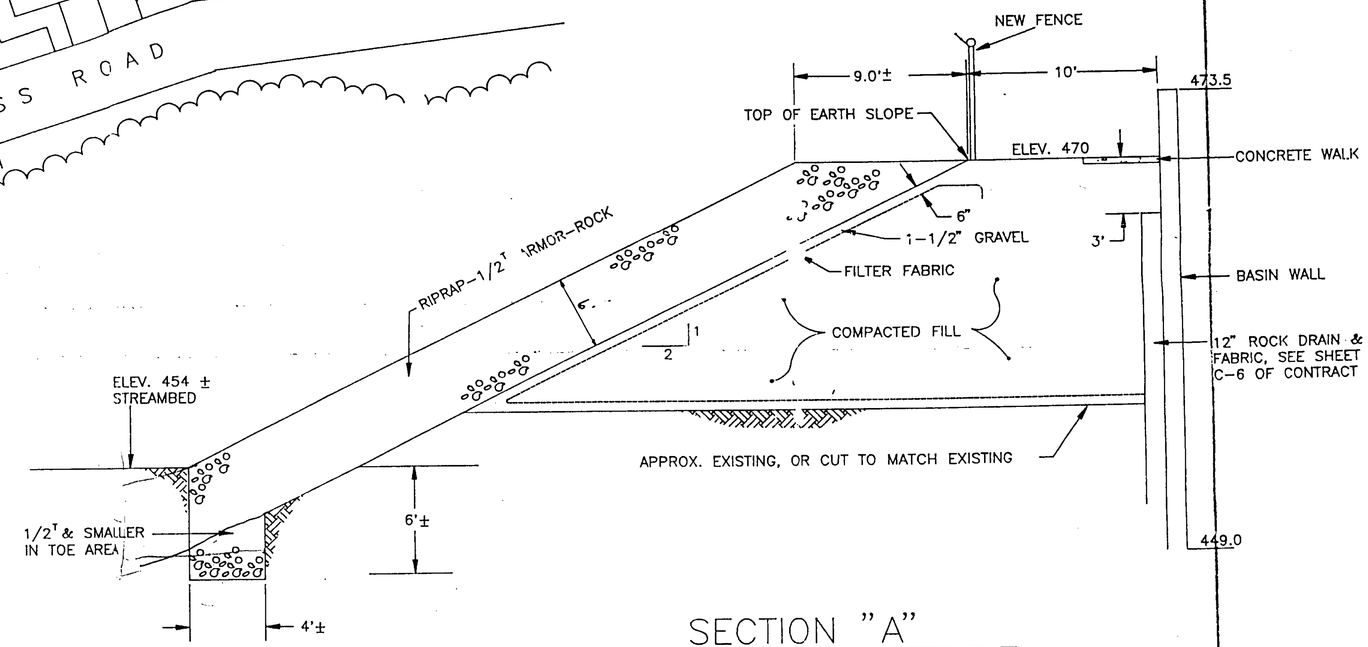

SECTION "A"

CREEK BANK RESTORATION

SCALE: 1/4"=1.0'

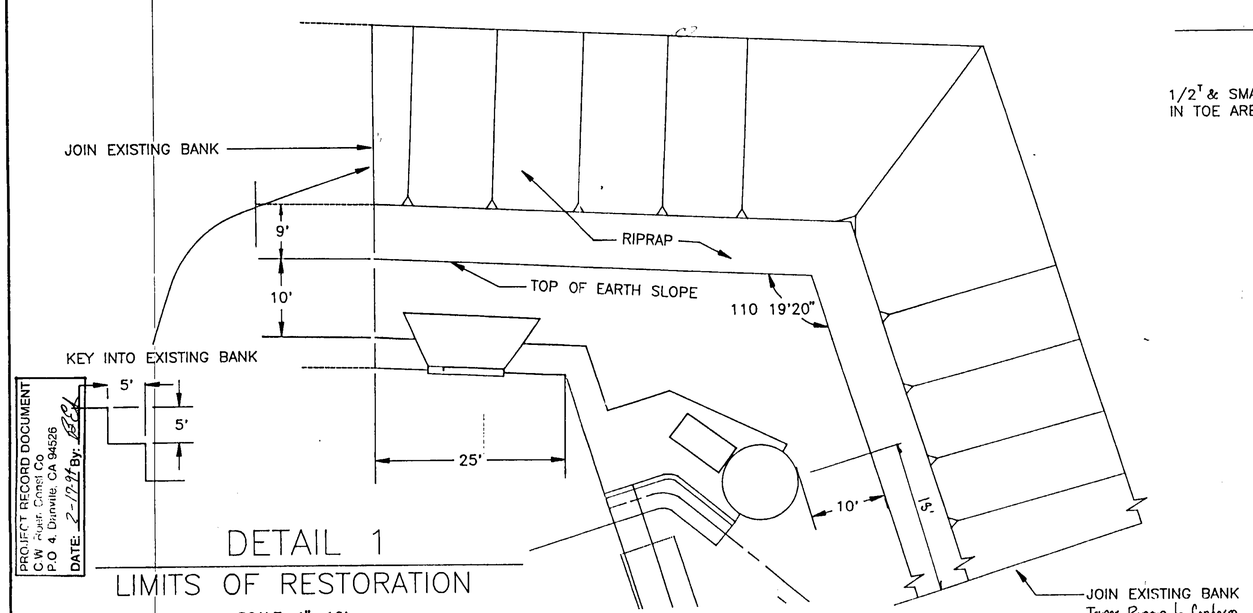

DETAIL 1

LIMITS OF RESTORATION

SCALE: 1"=10'

04691

7.0.#79

08.24.94 COPY

PROJECT RECORD DOCUMENT
C.W. Construct Co
P.O. 4, Danville, CA 94526
DATE: 2-17-94 By: [illegible]

REV. NO.	DATE	DESCRIPTION	APPVD.	DATE

REVISIONS

ENGINEER'S SEAL

LAS VIRGENES
MUNICIPAL WATER DISTRICT

CREEK BANK RESTORATION
TAPIA WATER RECLAMATION FACILITY

PREPARED BY:
LVMWD ENGINEERING
4232 LAS VIRGENES RD.
CALABASAS, CA 91302

APPROVED FOR LAS VIRGENES MUNICIPAL WATER DISTRICT
BY: JAMES E. COLBAUGH, DIRECTOR OF PLANNING & ENGINEERING
DATE: R.C.E. 22931

DATE:

SCALE:	DATE:	TRACT:	SHEET
AS SHOWN	JULY 1, 1992	N/A	C12

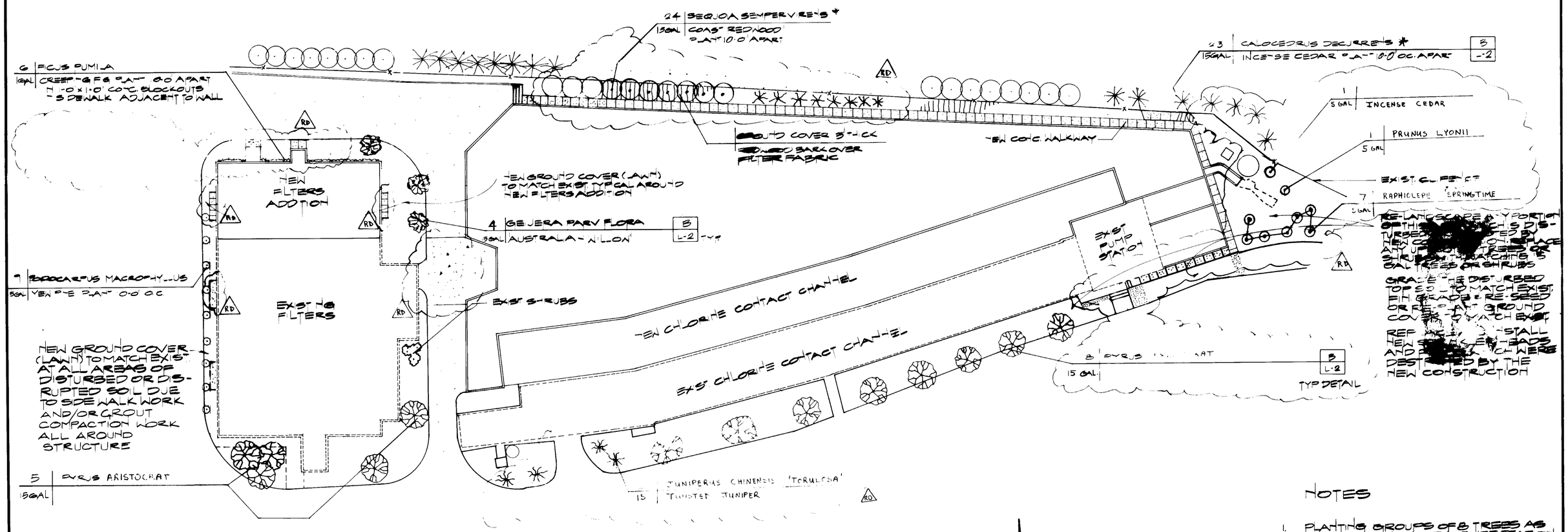

LANDSCAPE PLANTING PLAN

SCALE: NONE

NOTES

1. PLANTING GROUPS OF 8 TREES AS INDICATED. CLEAR EXIST. VEGETATION A MIN. OF 5'-0" PARALEL AND NORTH OF FENCE LINE PRIOR TO PLANTING TREES

04692

2. ALL EXIST. GROUND COVER, SHRUBS AND TREES WHICH ARE NOT AFFECTED BY THE NEW CONSTRUCTION TO REMAIN IN PLACE

REGISTERED PROFESSIONAL ENGINEER
3-21-91
CALIFORNIA

08.24.94 CONed

PROJECT RECORD DOCUMENT
CW [illegible] Const Co
P.O. [illegible] Danville CA 94526
DATE 1-18-94 By BEL

REV	DATE	BY	DESCRIPTION
RD	1-18-94	BEL	Walks at Filter / Planting
RD	1-18-94	BEL	As-Built - North of CC / East of CC

SCALE: N.T.S.

WARNING: 0 1/2 1 — IF THIS BAR DOES NOT MEASURE 1" THEN DRAWING IS NOT TO SCALE.

DESIGNED K. Abt
DRAWN T. Chaly
CHECKED [illegible]

SUBMITTED Clovis M. Racon — PROJECT ENGINEER — 41019 R.C.E. NO. — 11/26/90 DATE
RECOMMENDED [illegible] — JAMES M. MONTGOMERY CONSULTING ENGINEERS, INC. — 33699 R.C.E. NO. — 11/26/90 DATE

JMM James M. Montgomery Consulting Engineers, Inc.
Pasadena, California

APPROVED [illegible] DATE
APPROVED [illegible] DATE

LAS VIRGENES MWD/TRUNPO CSD
TAPIA WRF-REGIONAL FACILITIES EXPANSION IV
FILTRATION/DISINFECTION ADDITION

LANDSCAPE PLAN

SHEET L-1 OF 110 SHEETS

CC ____ FILE ____ JOB NO. ____

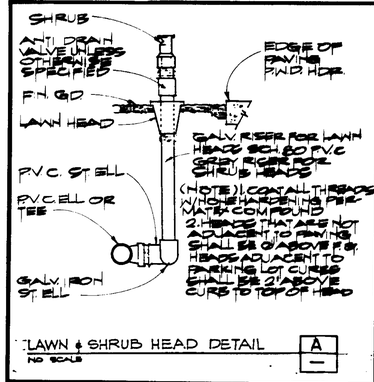

LAWN & SHRUB HEAD DETAIL — A
NO SCALE

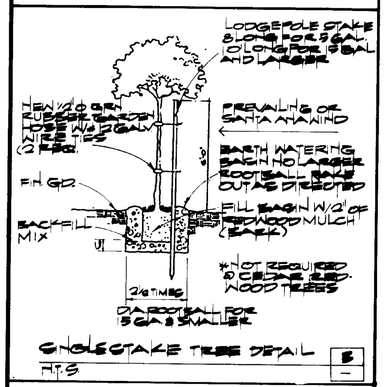

SINGLE STAKE TREE DETAIL — B
NT.S

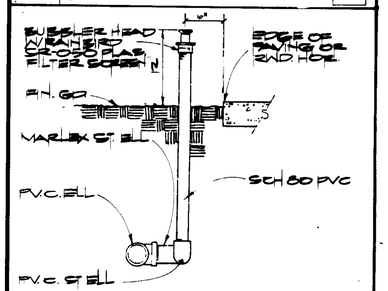

BUBBLER DETAIL — C
N.T.S.

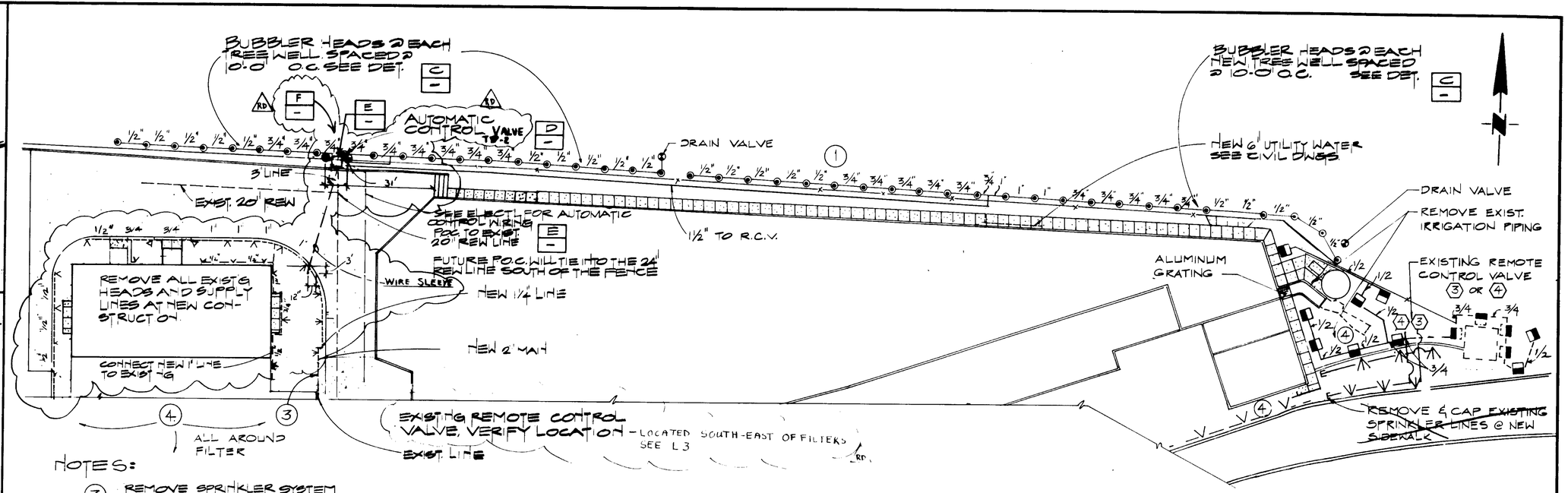

NOTES:

(3) REMOVE SPRINKLER SYSTEM IN WAY OF NEW CONSTRUCTION, CUT & CAP 2" LINE

RECONNECT SPRINKLER SYSTEM TO ORIGINAL CONTROL CIRCUIT AT EXIST. REMOTE CONTROL VALVE

(4) REMOVE AND REPLACE ALL IRRIGATION SYSTEM IN WAY OF NEW CONSTRUCTION

(5) THE CONTRACTOR SHALL CORE DRILL CONC. WALL OF CHEMICAL BUILDING IF NECESSARY TO INSTALL (CONNECT) CONTROL WIRES TO CONTROL PANEL.

IRRIGATION PLAN

NOTES:

(1) SPRINKLER PIPING ALONG NORTH SIDE OF THE EXISTING FENCING MAY NOT ALWAYS FALL BELOW FINISH GRADE DUE TO UNEVEN EXIST'G TERRAIN. ANY EXPOSED SUPPLY PIPING MUST BE PROPERLY SUPPORTED AND SPRINKLER HEADS HELD IN AN UPRIGHT POSITION

(2) TYPICAL FOR ALL PIPING
THE CONTRACTOR SHALL COVER ALL EXPOSED PIPING WITH NOT LESS THAN 6" OF SOIL.

08.24.94

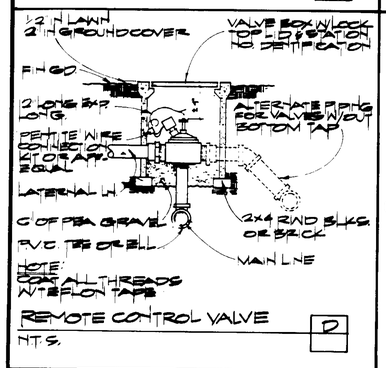

REMOTE CONTROL VALVE — D
NT.S.

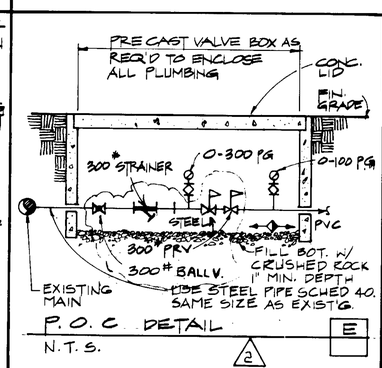

P.O.C. DETAIL — E
N.T.S.

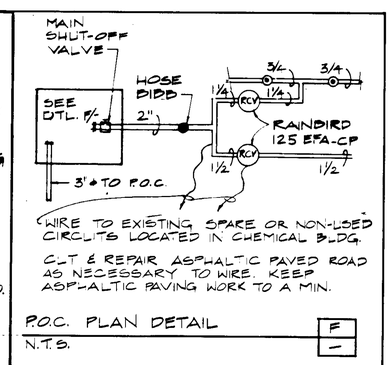

P.O.C. PLAN DETAIL — F
N.T.S.

PROJECT RECORD DOCUMENT
C.W. Roen Const Co
P.O. 4 Danville CA 94526
DATE: 1-18-94 By

IRRIGATION LEGEND

SYMBOL	MANUFACTURER	CAT. NO. DESCRIPTION	PSI	GPM	RAD.	REF/DET.
V	RAIN-O-MAT	310 - HALF LAWN SPRAY	15	.10	10	A
V	RAIN-O-MAT	310Q QTR LAWN SPRAY	15	.8	10	A
V	RAIN-O-MAT	320H HALF LAWN SPRAY	15	.7	2½	A
◉	RAIN BIRD	1401 PRESSURE COMP. BUBBLER	30	.25		C
○	RAINBIRD EPA	SERIES ELECTRICAL REMOTE CONTROL VALVE				D
▬	RAIN-O-MAT	320SH HALF SHRUB SPRAY	15	.8	10'	
⊓	GATE VALVE	LINE SIZE				

04693

REV	DATE	BY	DESCRIPTION
RD	1-18-94		SIDEWALKS
RD	1-18-94		Detail E, Detail F

SCALE: 1" = 20'

WARNING: 0 1/2 1 — IF THIS BAR DOES NOT MEASURE 1" THEN DRAWING IS NOT TO SCALE.

DESIGNED K. White
DRAWN F. Chaley
CHECKED

SUBMITTED: Jorge M. Pacas — PROJECT ENGINEER — R.C.E. NO. 41019 — DATE 11/26/90
RECOMMENDED: James M. Montgomery — JAMES M. MONTGOMERY CONSULTING ENGINEERS, INC. — R.C.E. NO. 33699 — DATE 11/26/90

JMM James M. Montgomery Consulting Engineers, Inc.
Pasadena, California

APPROVED — DISTRICT ENGINEER — DATE
APPROVED — DATE

LAS VIRGENES MWD/TRIUNFO CSD
TAPIA WRF - REGIONAL FACILITIES EXPANSION IV
FILTRATION/DISENFECTION ADDITION

IRRIGATION PLAN

SHEET L-2 OF 110 SHEETS

JOB NO. ____ FILE ____

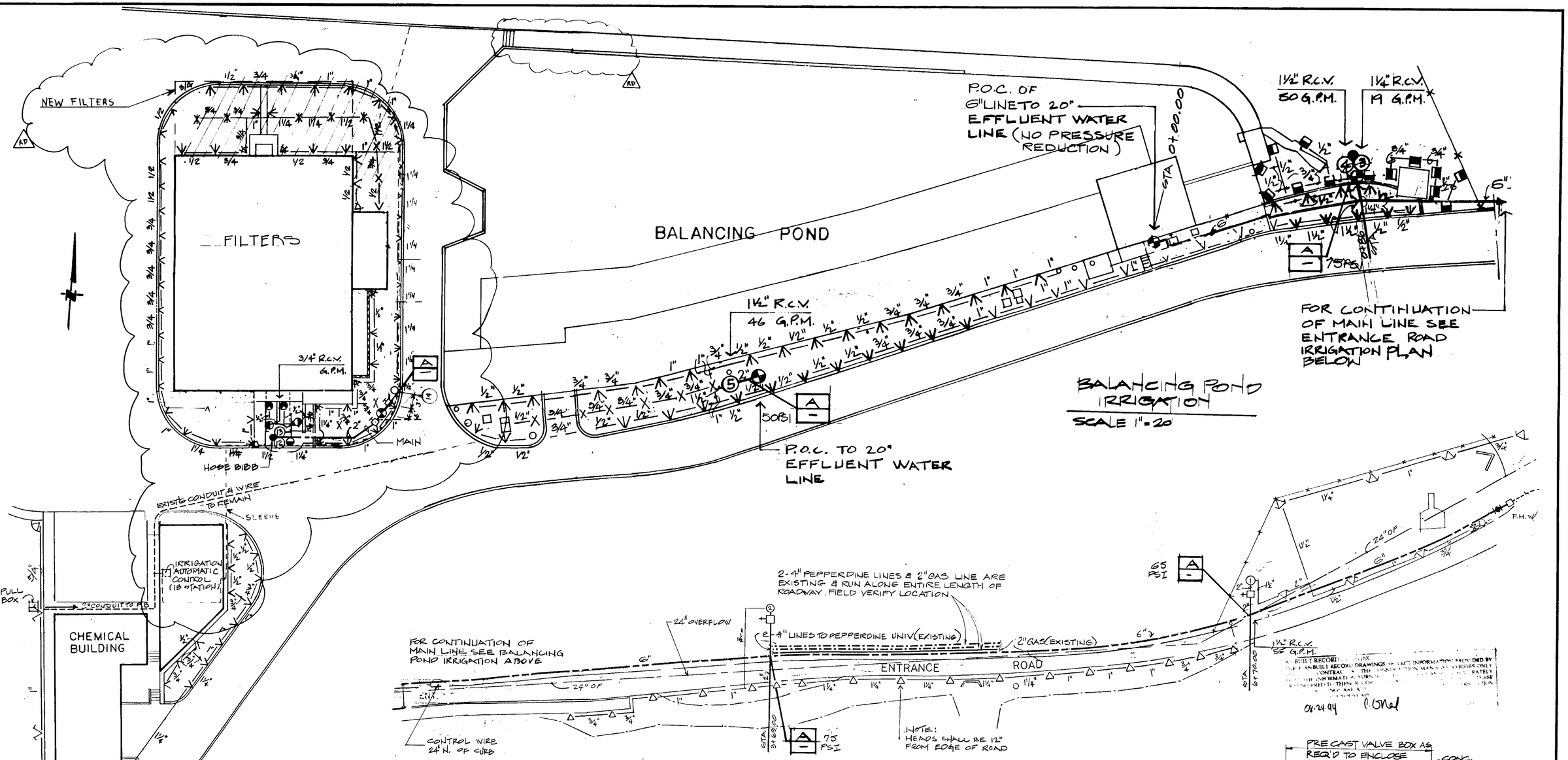

NOTES:

1. CONTRACTOR SHALL REWORK SIX EXISTING ABOVE GRADE POINTS OF CONNECTION IN THE IRRIGATION SYSTEM AS SHOWN. THE REVISED POINTS OF CONNECTION SHALL BE AS SHOWN IN DETAIL 'A'. CONTRACTOR SHALL FIELD VERIFY EXACT LOCATIONS AND PIPING ARRANGEMENT TO CONFIRM SIZE OF PRE-CAST VALVE BOX.
2. THIS DRAWING SHOWS APPROXIMATE EXISTING IRRIGATION SYSTEM. CHANGES MODIFICATIONS AND ADDITIONS TO THE IRRIGATION SYSTEM ARE SHOWN ON SHT L-2

PROJECT-RECORD DOCUMENT
C.W. Roen Const Co.
P.O. 4, Danville, CA 94526
DATE: 1-18-94 By: B.E.D.

REV	DATE	BY	DESCRIPTION
RD	1-18-94	BED	AS-BUILT

SCALE: AS NOTED

WARNING: 0 1/2 1 — IF THIS BAR DOES NOT MEASURE 1" THEN DRAWING IS NOT TO SCALE.

DESIGNED K. Okita
DRAWN L. Chisley
CHECKED

SUBMITTED: James M. Sieve, PROJECT ENGINEER — 41019 R.C.E. NO. — 11/26/90 DATE
RECOMMENDED: JAMES M. MONTGOMERY, CONSULTING ENGINEERS, INC. — 33699 R.C.E. NO. — 11/26/90 DATE

JMM James M. Montgomery Consulting Engineers, Inc. Pasadena, California

APPROVED — DATE
APPROVED — DATE

LAS VIRGENES MWD / TRUNFO GSD
TAPIA WRF - REGIONAL FACILITIES EXPANSION 19
FILTRATION / DISINFECTION ADDITION

REVISED POINTS OF CONNECTIONS

SHEET L-3 OF 110 SHEETS

JOB NO. ____ FILE ____ CO ____

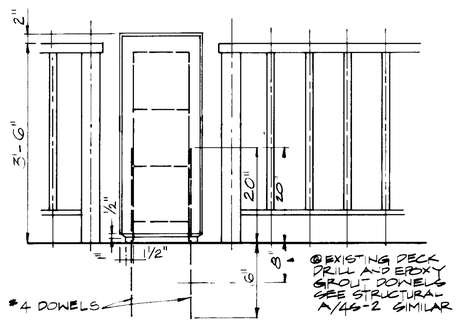

ELEVATION

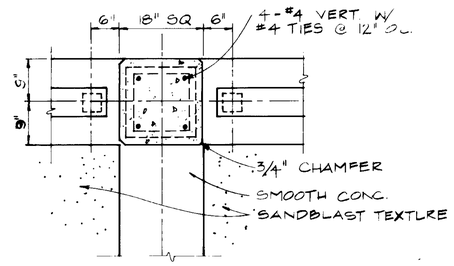

PLAN

BOLLARD — SCALE 3/4" = 1'-0" — P

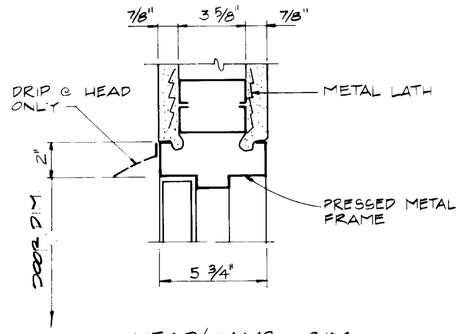

HEAD/JAMB SIM.

DOOR DETAIL — SCALE 3" = 1'-0" — K

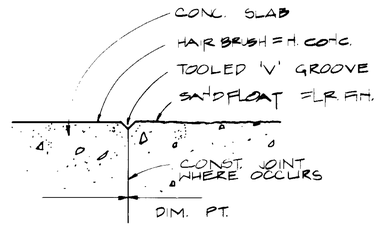

SLAB FINISH — SCALE 3" = 1'-0" — G

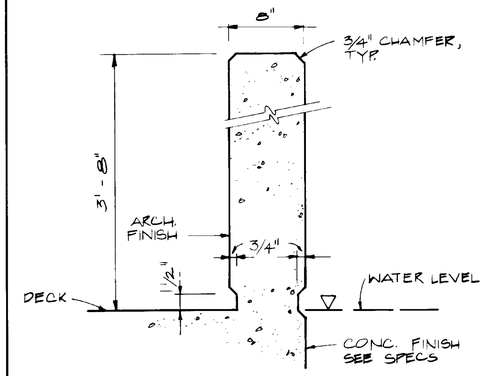

CONCRETE WALL DETAIL — SCALE 1 1/2" = 1'-0" — D

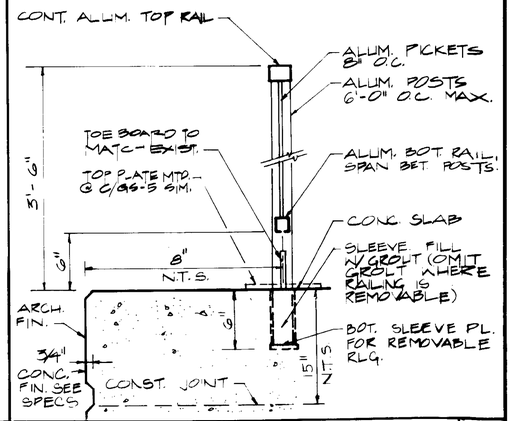

PICKET RAILING — SCALE 1 1/2" = 1'-0" — A

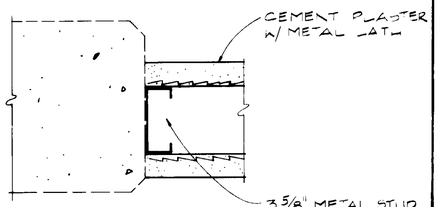

NEW PLASTER WALL ON EXIST CONC. WALL — SCALE 3" = 1'-0" — L

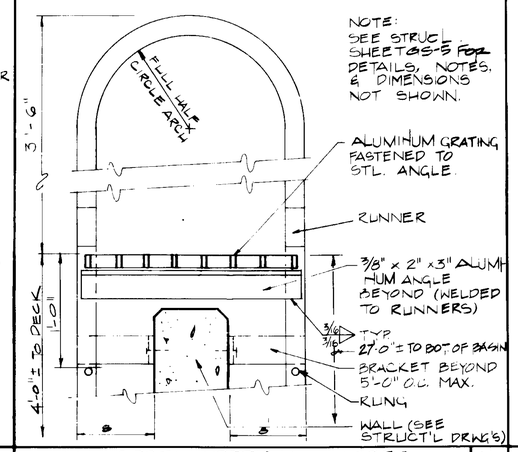

GALV. STEEL VERTICAL LADDER — SCALE 1 1/2" = 1'-0" — H

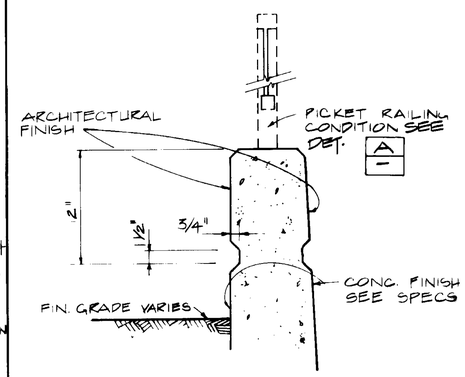

CONCRETE WALL DETAIL — SCALE 1 1/2" = 1'-0" — E

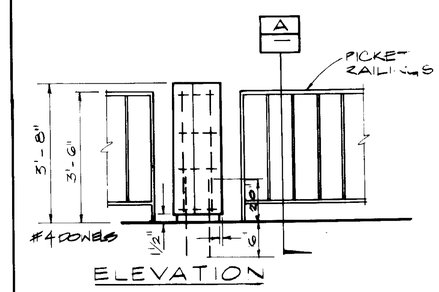

ELEVATION

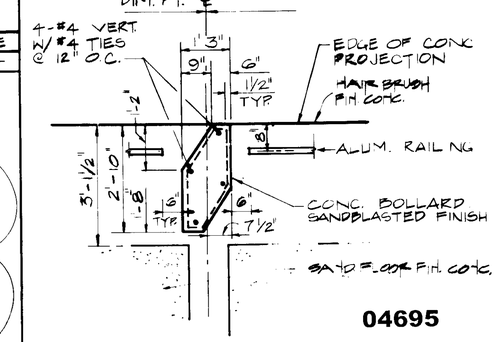

PLAN

TYPICAL BOLLARD — SCALE 1/2" = 1'-0" — C

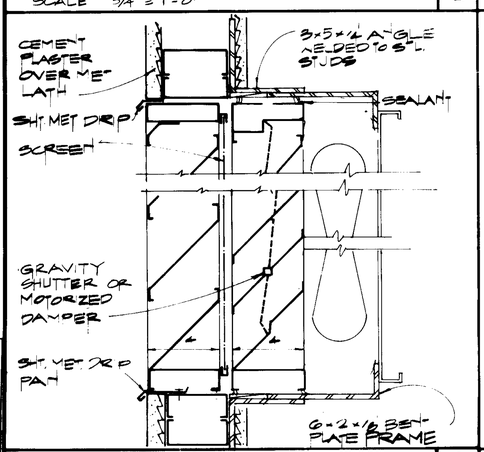

LOUVER & DAMPER — SCALE 3" = 1'-0" — Q

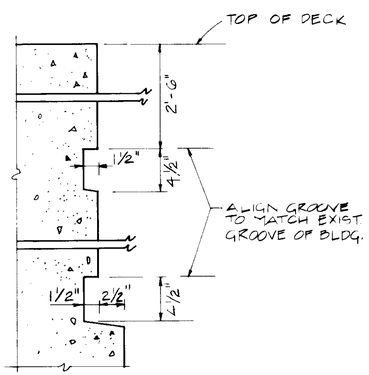

WALL GROOVES TYPICAL — SCALE 1 1/2" = 1'-0" — M

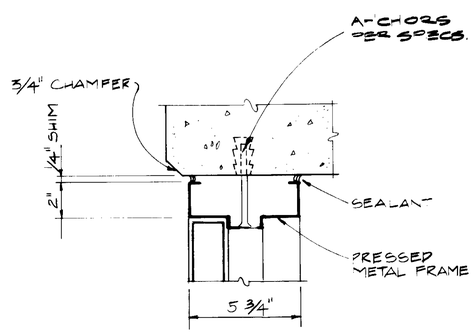

JAMB

DOOR DETAIL — SCALE 3" = 1'-0" — J

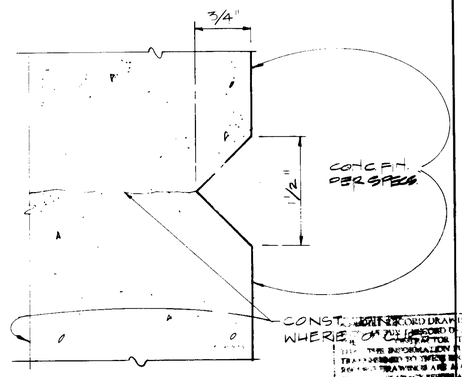

TYPICAL V-GROOVE AT WALL — FULL SCALE — F

AS-BUILT RECORD DRAWING
08 24 94 BY

04695

William H. Brown 11-3-90

PROJECT RECORD DOCUMENT
C.W. Roen Const Co.
P.O. 4 Danville, CA 94526
DATE: 1-24-94 By: RC

JOB NO. ___ FILE ___ CC ___

REV	DATE	BY	DESCRIPTION

SCALE: AS NOTED

WARNING: 0 1/2 1 — IF THIS BAR DOES NOT MEASURE 1" THEN DRAWING IS NOT TO SCALE.

DESIGNED M. Ciccarello
DRAWN L. ZYCH
CHECKED William H. Brown

SUBMITTED — PROJECT ENGINEER — 410,9 R.C.E. NO. — 11/26/90 DATE
RECOMMENDED — JAMES M. MONTGOMERY CONSULTING ENGINEERS, INC. — 33699 R.C.E. NO. — 11/26/90 DATE

JMM James M. Montgomery Consulting Engineers, Inc.
Pasadena, California

APPROVED ___ DATE
APPROVED ___ DATE

LAS VIRGENES MWD / TRUMPO CSD
TAPIA WTP - REGIONAL FACILITIES EXPANSION IV
FILTRATION / DISINFECTION ADDITION

DETAILS

SHEET A-1 OF 110 SHEETS

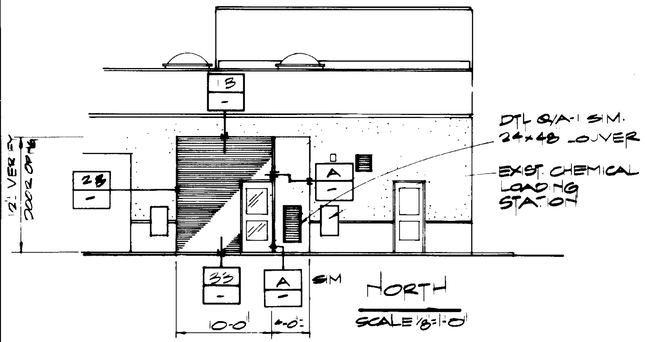

NORTH
SCALE 1/8"=1'-0"

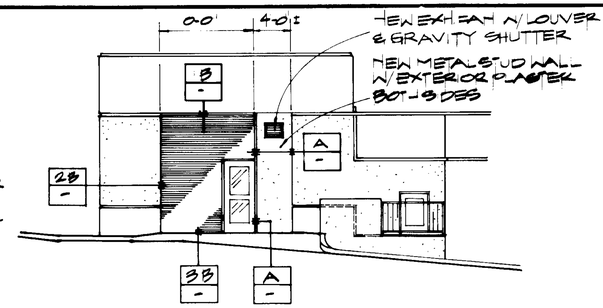

EAST
SCALE 1/8"=1'-0"

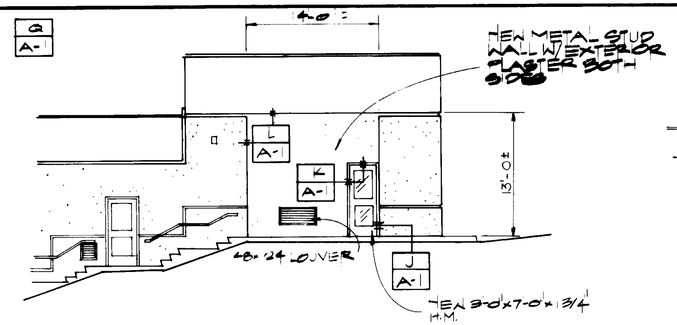

WEST
SCALE 1/8"=1'-0"

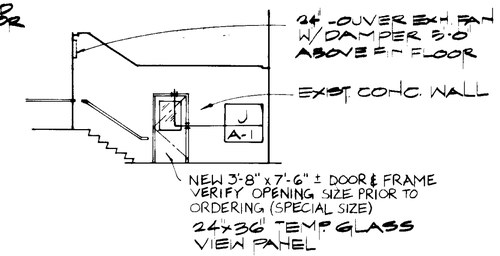

SECTION
SCALE 1/8"=1'-0"

SEE NOTE (5) FOR WHOLE BUILDING, REPAIR EXISTING EXTERIOR COATING

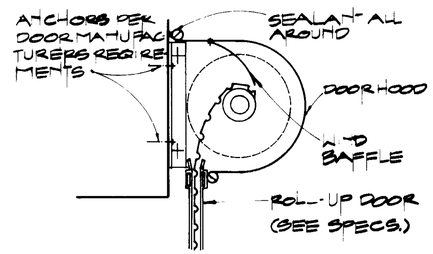

HEAD 1B

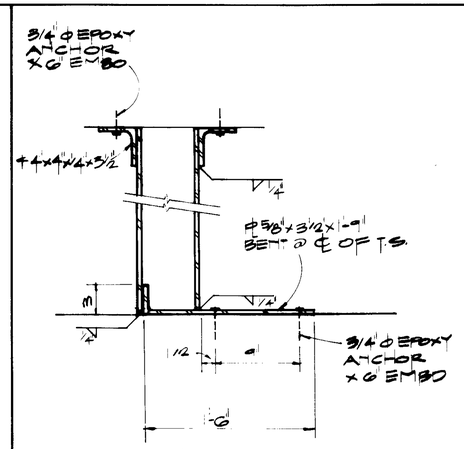

SECTION 2

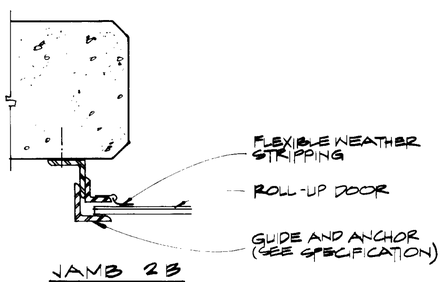

JAMB 2B

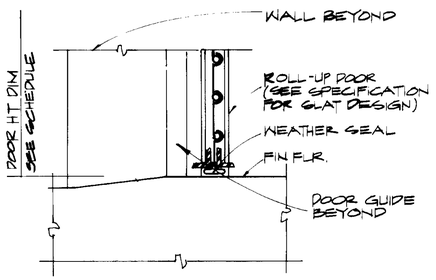

SILL 3B

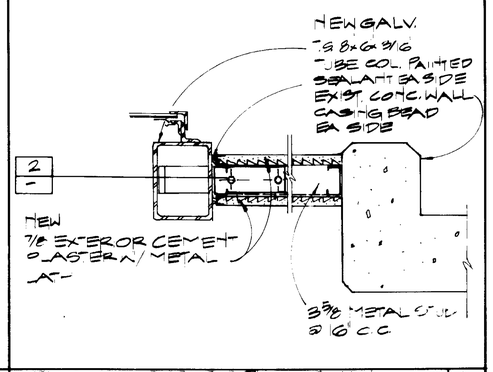

ROLL-UP DOOR — 3
SCALE 3"=1'-0"

5" COLUMN & CEMENT PLASTER WALL — A
SCALE 1/2"=1'-0"

NOTES

1. REMOVE EXIST CONC WALL PATCH FLOOR (MATCH ADJACENT SURFACE)
2. REMOVE EXIST DOOR AND FRAME INSTALL NEW OUTSWING DOOR AND FRAME W/SPECIFIED FINISH HARDWARE
3. REMOVE EXIST ROLL-UP DOOR COIL DOORS (TRACKS & PARTS MAY BE SALVAGED AND REUSED AT CONTRACTORS OPTION
4. REMOVE WALL AS NECESSARY FOR NEW FAN AND LOUVER SAW CUT OPENING USE FLANGED LOUVER
5. REMOVE ALL EXISTING DAMAGED SACKED CONC. WALL SURFACES, REPLASTER WALL SURFACES WHERE SACKED CONCRETE HAS BEEN REMOVED.

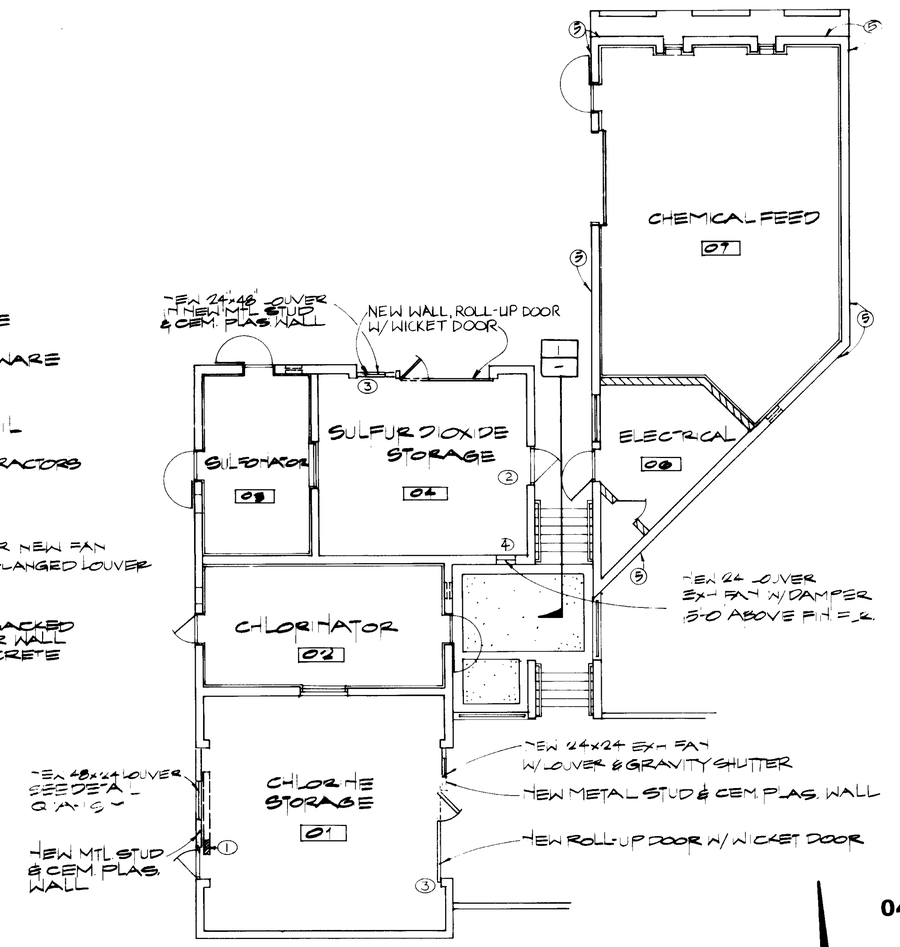

04696

FLOOR PLAN
1/8"=1'-0"

William H. Brown 11-21-91

08.24.94

PROJECT RECORD DOCUMENT
C.W. Roen Const. Co.
P.O. 4, Danville, CA 94526
DATE: 1-24-92 By: RCJ

FILE ____ CC ____ JOB NO. ____

REV	DATE	BY	DESCRIPTION

SCALE: AS NOTED

WARNING: 0 1/2 1 — IF THIS BAR DOES NOT MEASURE 1" THEN DRAWING IS NOT TO SCALE.

DESIGNED W. Pascoito
DRAWN L. Shirley
CHECKED William H. Brown

SUBMITTED — PROJECT ENGINEER: George M. Larson — R.C.E. NO. 41019 — DATE 11/26/90
RECOMMENDED — JAMES M. MONTGOMERY CONSULTING ENGINEERS, INC.: R.C.E. NO. 33699 — DATE 11/26/90

JMM James M. Montgomery Consulting Engineers, Inc. — Pasadena, California

APPROVED: DIST. ENGR. APPROVAL ON COVER — DATE
APPROVED — DATE

LAS VIRGENES MWD/TRUNPO GSD
TAPIA WRF-FILTRATION/DISINFECTION ADDITION
FLOOR PLAN, EXT. ELEVATIONS AND DETAILS
CHEMICAL BUILDING MODIFICATIONS

SHEET A-2 OF 110 SHEETS

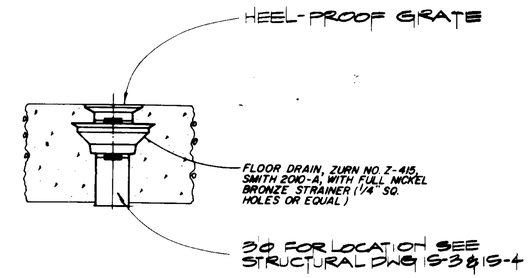

CONC. DECK DRAIN
NO SCALE

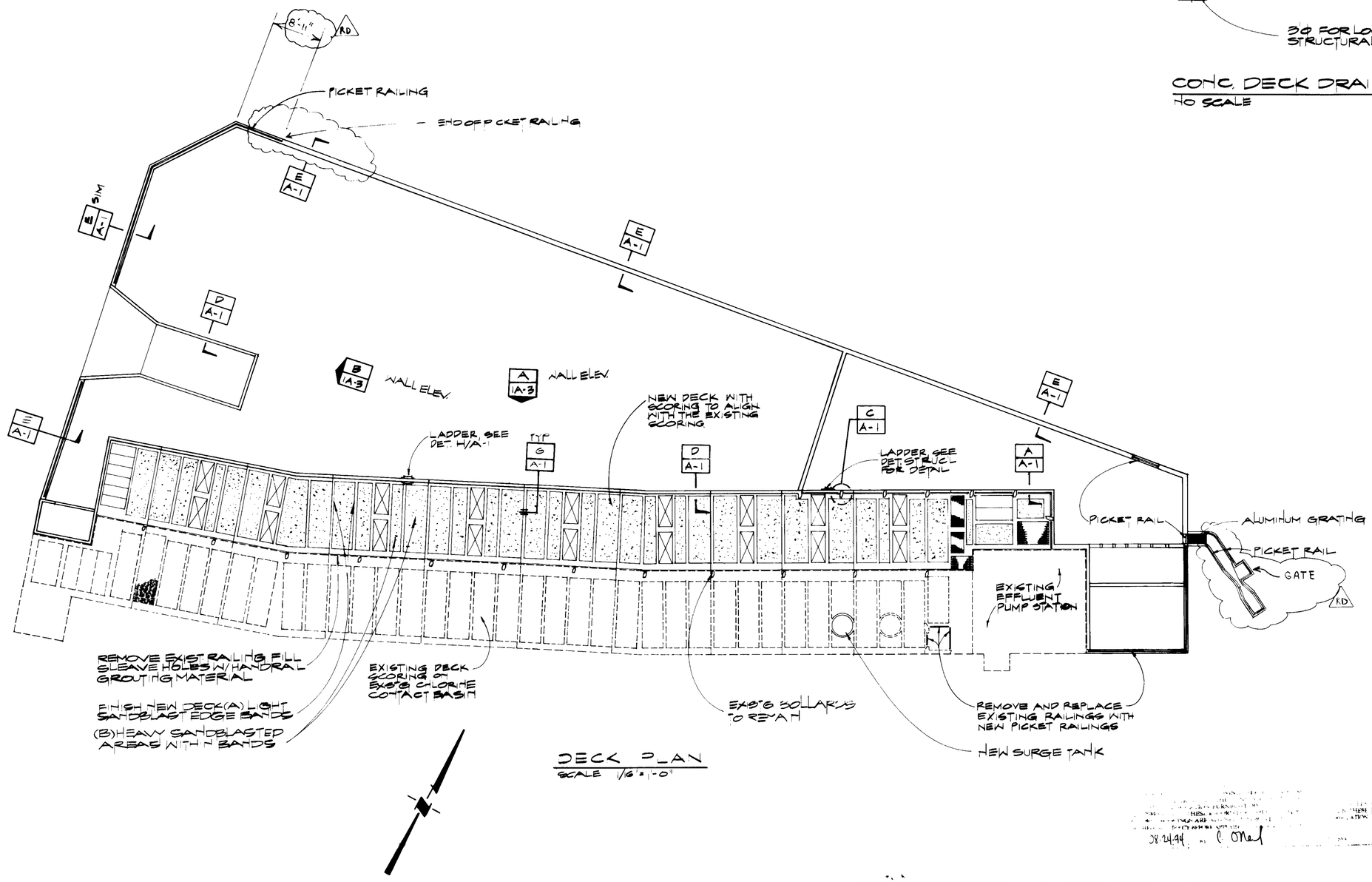

DECK PLAN
SCALE 1/8" = 1'-0"

04697

PROJECT RECORD DOCUMENT
C.W. Roen Const Co.
P.O. 4, Danville, CA 94526
DATE: 1-27-94 By: BCL

REV	DATE	BY	DESCRIPTION
RD	1-29-91	BCL	Handrail

SCALE: 1/8" = 1'-0"

WARNING: 0 1/2 1 — IF THIS BAR DOES NOT MEASURE 1" THEN DRAWING IS NOT TO SCALE.

DESIGNED W. Giacaste
DRAWN W. Giacaste
CHECKED William H. Brown

SUBMITTED: Jorge M. Lacson — PROJECT ENGINEER — R.C.E. NO. 41019 — DATE 11/26/90
RECOMMENDED: JAMES M. MONTGOMERY CONSULTING ENGINEERS, INC. — R.C.E. NO. 33699 — DATE 11/26/90

JMM James M. Montgomery Consulting Engineers, Inc.
Pasadena, California

APPROVED D.S. — DATE
APPROVED — DATE

LAS VIRGENES MWD / TRUNFO CSD
TAPIA WRF - REGIONAL FACILITIES EXPANSION IV
FILTRATION / DISINFECTION ADDITION

CHLORINE CONTACT TANK DECK PLAN

SHEET 1A-1 OF 110 SHEETS

JOB NO. ____ FILE ____ CC ____

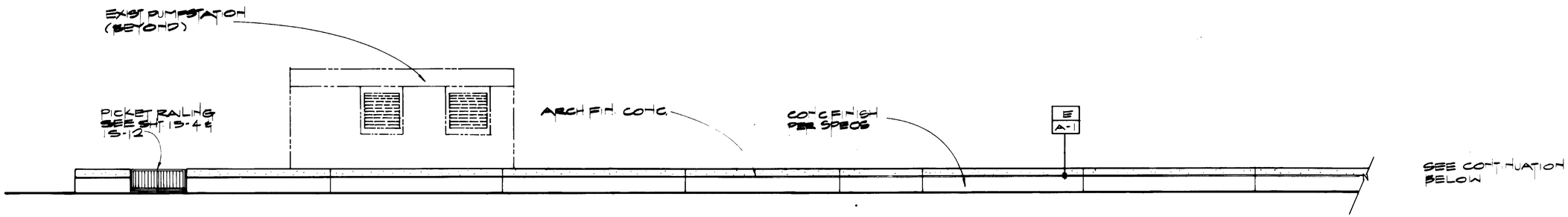

NORTH ELEV. (EAST END)

1/8"=1'-0"

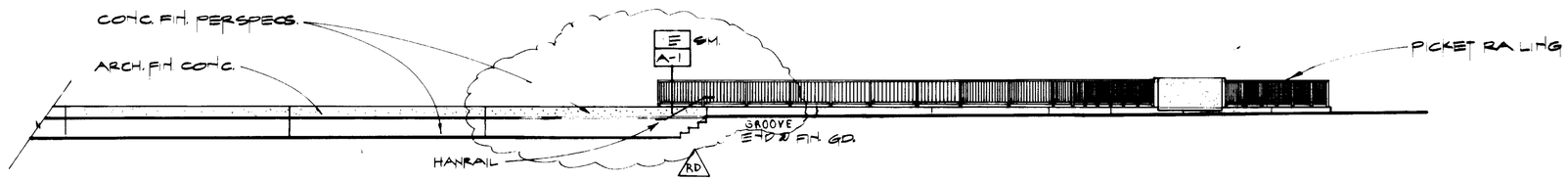

NORTH ELEV (WEST END)

1/8"=1'-0"

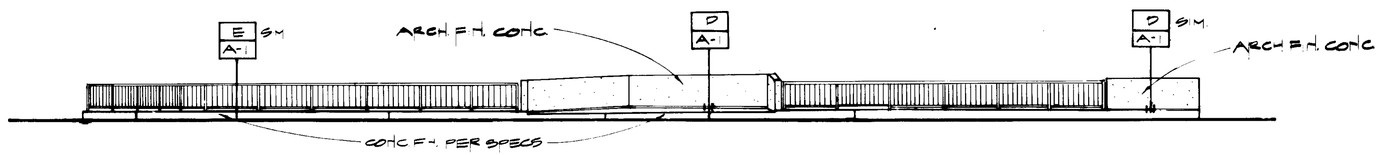

WEST ELEV.

1/8"=1'-0"

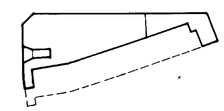

ELEVATION KEY PLAN

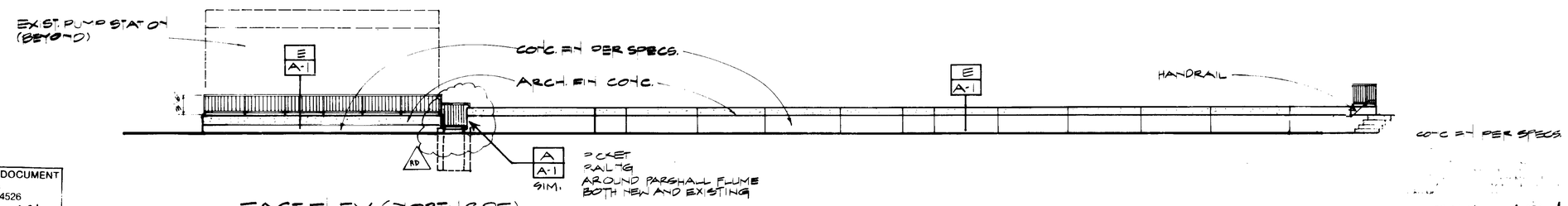

EAST ELEV (NORTH SIDE)

1/8"=1'-0"

04698

REGISTERED ARCHITECT WILLIAM H. BROWNING 11-31-91

PROJECT RECORD DOCUMENT
C.W. Roen Const Co.
P.O. 4 Danville, CA 94526
DATE: 1-28-94 By: ACd

08-24-94 C.O.N.

REV	DATE	BY	DESCRIPTION
RD	1-28-94	ACd	Handrail + North-West STEPS

SCALE: AS-OTED

WARNING: 0 1/2 1 — IF THIS BAR DOES NOT MEASURE 1" THEN DRAWING IS NOT TO SCALE.

DESIGNED W. Bracciotto
DRAWN L. Chisley
CHECKED William H. Browning

SUBMITTED George M. Sacco — PROJECT ENGINEER — R.C.E. NO. 41019 — DATE 11/26/90
RECOMMENDED [signature] — JAMES M. MONTGOMERY CONSULTING ENGINEERS, INC. — R.C.E. NO. 33699 — DATE 11/26/90

JMM James M. Montgomery Consulting Engineers, Inc.
Pasadena, California

APPROVED ____ DATE ____
APPROVED ____ DATE ____

LAS VIRGENES MWD/TRUMPO CSD
TAPIA WRF-REGIONAL FACILITIES IV
FILTRATION/DISINFECTION ADDITION

CHLORINE CONTACT TANK EXTERIOR ELEVATIONS

SHEET 1A-2 OF 110 SHEETS

JOB NO. ____ FILE ____ CC ____

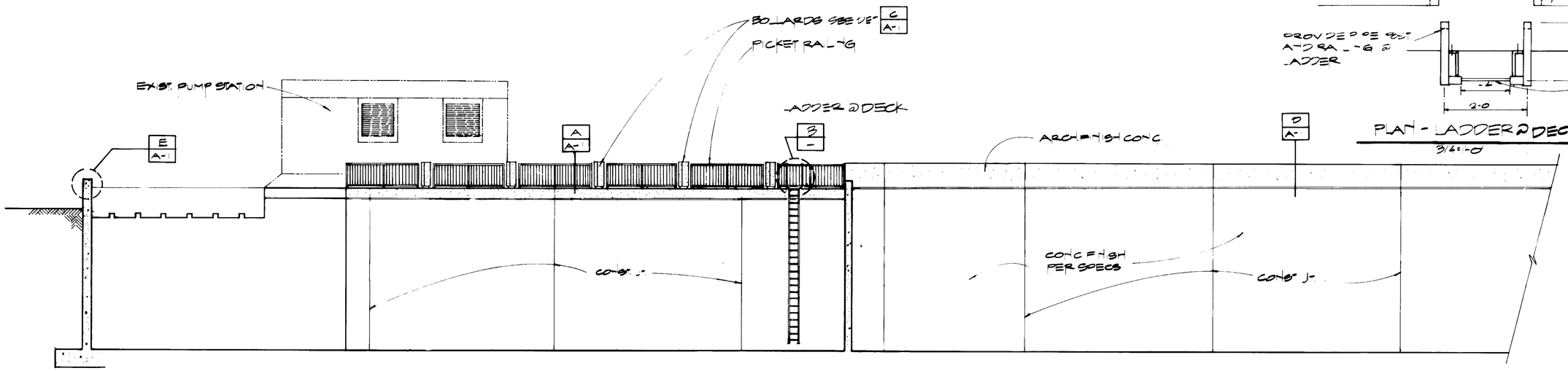

SECTIONAL ELEVATION SOUTH
1/8"=1'-0" A 1A-1

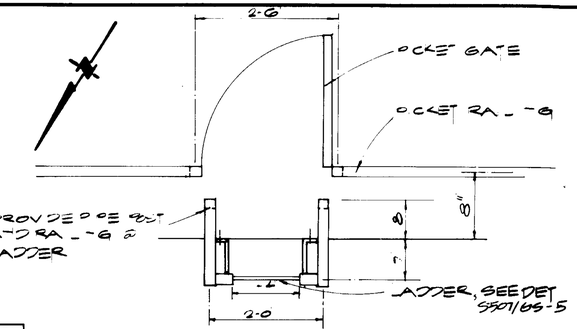

PLAN - LADDER @ DECK
3/4"=1'-0" B -

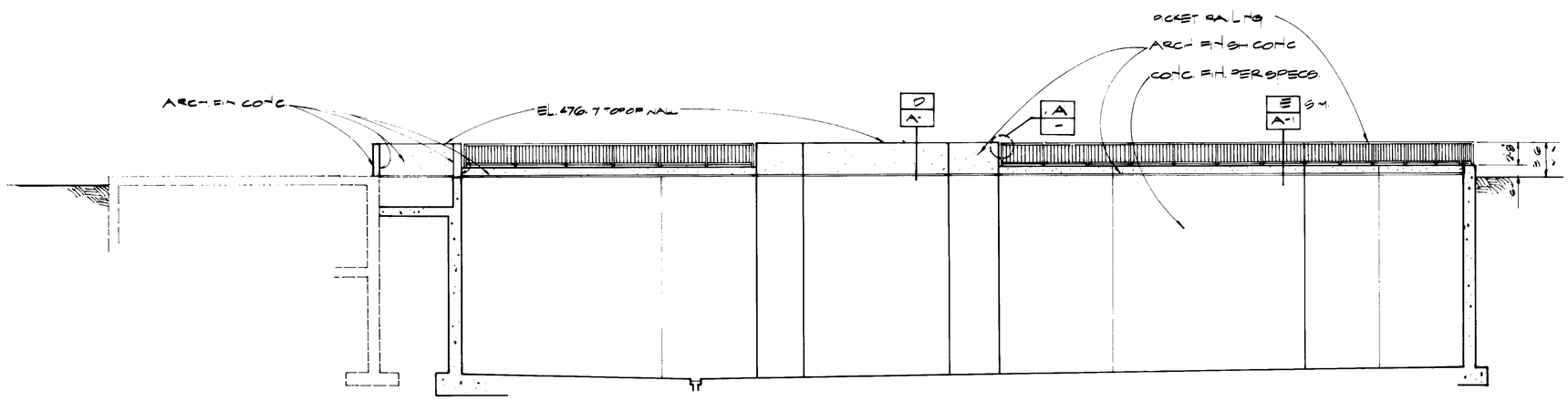

SECTIONAL ELEVATION WEST
1/8"=1'-0" B 1A-1

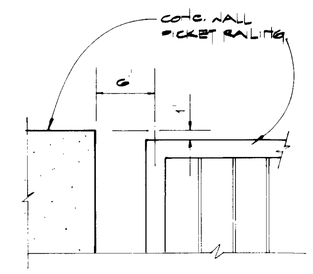

POCKET RAILING
1/2"=1'-0" A -

04699

PROJECT-RECORD DOCUMENT
C.W. Roen Const Co.
P.O. 4, Danville, CA 94526
DATE: 1-28-91 By: BEd

08-24-94 C.O. No. 1

REV	DATE	BY	DESCRIPTION

SCALE: AS-0"-0"

WARNING: 0 1/2 1 — IF THIS BAR DOES NOT MEASURE 1" THEN DRAWING IS NOT TO SCALE.

DESIGNED W. Bacorto
DRAWN L. Chesley
CHECKED

SUBMITTED George M. Racow — PROJECT ENGINEER — 41019 R.C.E. NO. — 11/26/90 DATE
RECOMMENDED — JAMES M. MONTGOMERY CONSULTING ENGINEERS, INC. — 33699 R.C.E. NO. — 11/26/90 DATE

JMM James M. Montgomery Consulting Engineers, Inc. Pasadena, California

APPROVED — DIST. — SET — DATE
APPROVED — DATE

LAS VIRGENES MWD / TRIUNFO CSD
TAPIA WRF - REGIONAL FACILITIES EXPANSION IV
FILTRATION / DISINFECTION ADDITION

CHLORINE CONTACT TANK
SECTIONAL ELEVATIONS

SHEET 1A-3 OF 110 SHEETS

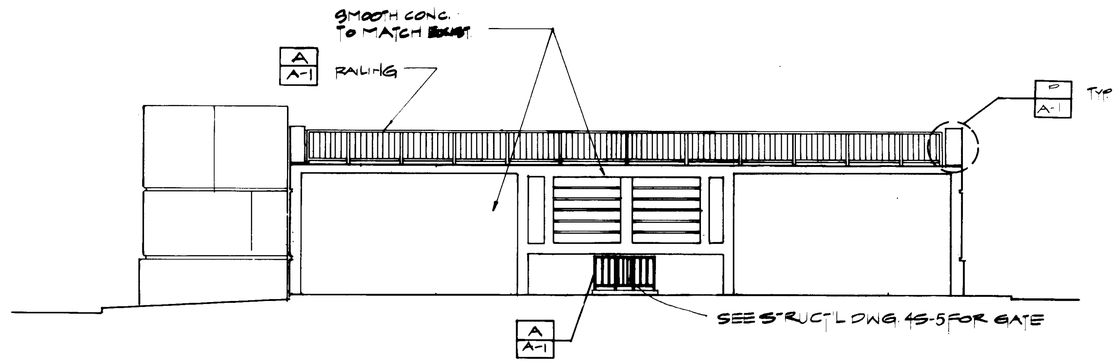

NORTH ELEVATION
1/8"=1'-0"

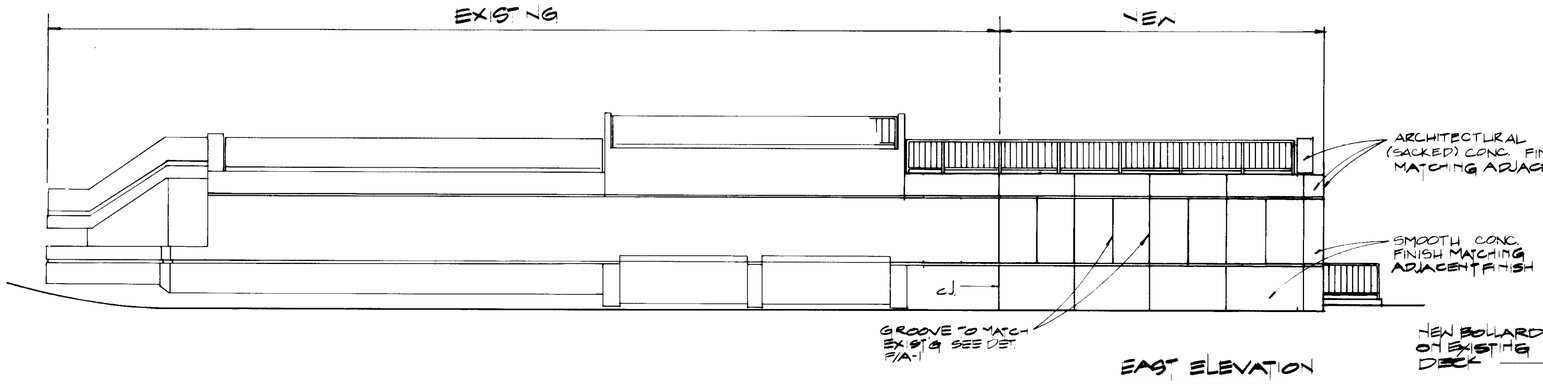

EAST ELEVATION
1/8"=1'-0"

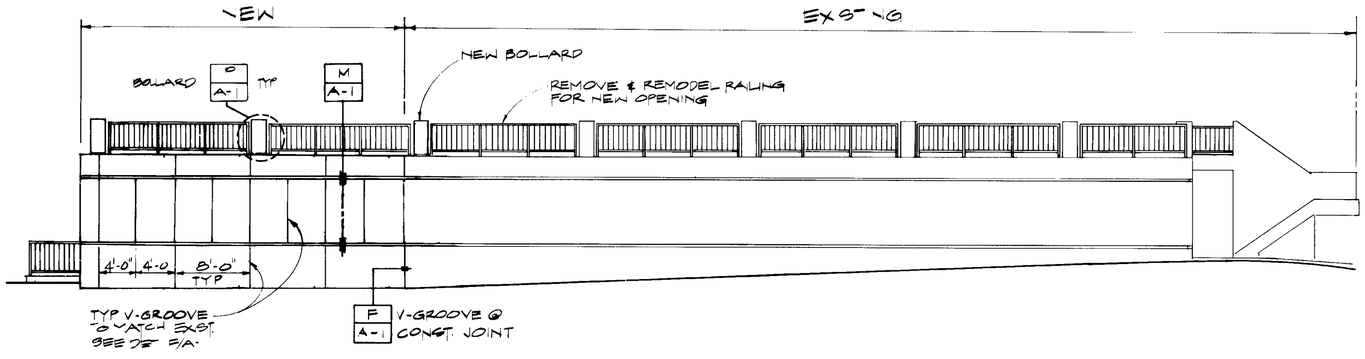

WEST ELEVATION
1/8"=1'-0"

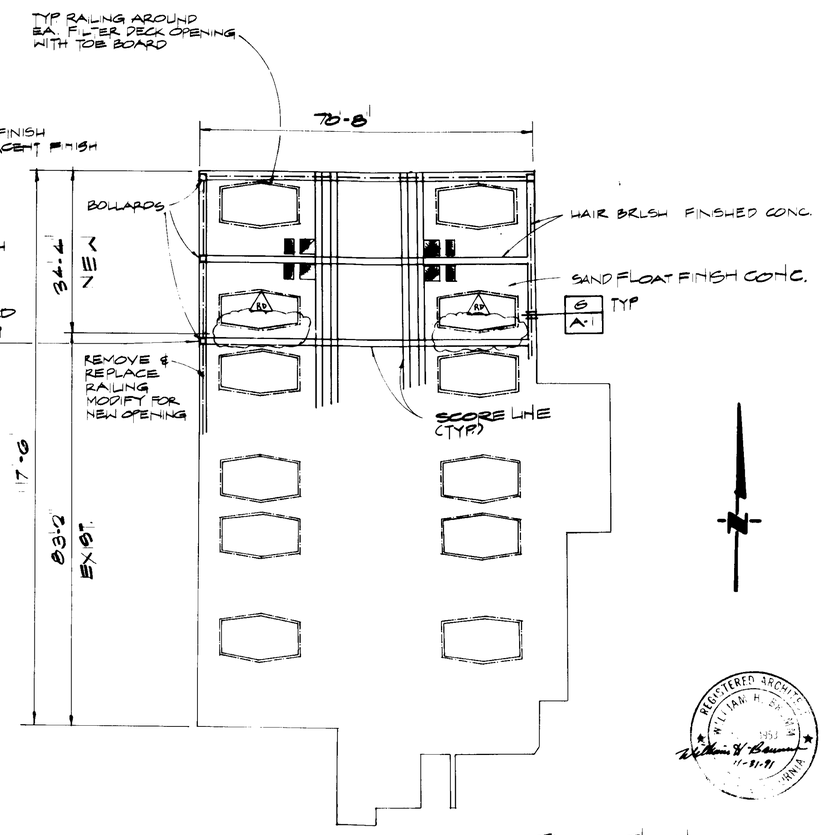

FLOOR PLAN
1/16"=1'-0"

REGISTERED ARCHITECT WILLIAM H. BAUMAN 11-21-91 VIRGINIA

08.24.94 [illegible]

PROJECT RECORD DOCUMENT
C.W. Roen Const Co.
P.O. 4, Danville, CA 94526
DATE: 1-28-94 By: [illegible]

04700

REV	DATE	BY	DESCRIPTION
RD	1-28-94	GBD	DECK OPENING / HANDRAIL

SCALE: AS NOTED

WARNING: 0 1/2 1 — IF THIS BAR DOES NOT MEASURE 1" THEN DRAWING IS NOT TO SCALE.

DESIGNED W. Giacomo
DRAWN W. Giacomo
CHECKED [illegible]

SUBMITTED: [illegible] PROJECT ENGINEER — R.C.E. NO. 41019 — DATE 11/26/90
RECOMMENDED: [illegible] JAMES M. MONTGOMERY CONSULTING ENGINEERS, INC. — R.C.E. NO. 33699 — DATE 11/26/90

JMM James M. Montgomery Consulting Engineers, Inc.
Pasadena, California

APPROVED: DISTRICT APPROVAL [illegible] DATE
APPROVED: DATE

LAS VIRGENES MWD / TRIUNFO CSD
TAPIA WRF - REGIONAL FACILITIES EXPANSION IV
FILTRATION / DISINFECTION ADDITION

FILTERS - PLAN AND EXTERIOR ELEVATIONS

SHEET 4A-1 OF 110 SHEETS

JOB NO ____ FILE ____ CC ____

GENERAL NOTES

GENERAL

STRUCTURAL DIMENSIONS CONTROLLED BY OR RELATED TO MECHANICAL OR ELECTRICAL EQUIPMENT SHALL BE VERIFIED BY THE CONTRACTOR PRIOR TO CONSTRUCTION.

MECHANICAL AND ELECTRICAL EQUIPMENT SUPPORTS, ANCHORAGES, OPENINGS, RECESSES AND REVEALS NOT SHOWN ON THE STRUCTURAL DRAWINGS BUT REQUIRED BY OTHER CONTRACT DRAWINGS, SHALL BE PROVIDED FOR PRIOR TO PLACING CONCRETE.

STRUCTURAL DRAWINGS SHALL BE USED IN COORDINATION WITH MECHANICAL, ELECTRICAL, ARCHITECTURAL, CIVIL DRAWINGS AND SHOP DRAWINGS PROVIDED BY MANUFACTURERS OF EQUIPMENT.

STRUCTURES HAVE BEEN DESIGNED FOR OPERATIONAL LOADS ON THE COMPLETED STRUCTURES. DURING CONSTRUCTION, THE STRUCTURES SHALL BE PROTECTED BY BRACING AND BALANCING WHEREVER EXCESSIVE CONSTRUCTION LOADS MAY OCCUR.

UNLESS OTHERWISE SHOWN, ON ALL STRUCTURAL DRAWINGS THE FINISH GRADE AROUND STRUCTURES IS SHOWN THUS, INDICATING EITHER GROUND SURFACE, TOP OF CONCRETE SLAB OR A.C. PAVEMENT. FOR DETAILS OF FINISH SURFACES SEE CIVIL AND ARCHITECTURAL DRAWINGS.

STRUCTURAL

DESIGN IN ACCORDANCE WITH THE 1985 EDITION OF THE UNIFORM BUILDING CODE, EXCEPT WHERE OTHER APPLICABLE CODES OR THE FOLLOWING NOTES ARE MORE RESTRICTIVE.

LOCATION OF ALL CONSTRUCTION JOINTS SHALL BE AS SHOWN ON THE DRAWINGS OR APPROVED BY THE ENGINEER. ALL CONSTRUCTION JOINTS LOCATED ON THE DRAWINGS OR REQUIRED FOR CONSTRUCTION BUT NOT SHOWN ON THE DRAWINGS, SHALL HAVE A 6" FLATSTRIP WATERSTOP, IF IN MEMBERS IN CONTACT WITH WATER. IN ALL SLABS COVERED WITH WATER, CONSTRUCTION JOINTS SHALL HAVE A 6" FLATSTRIP WATERSTOP AND A SEALANT GROOVE.

STRUCTURAL STEEL

STEEL CONSTRUCTION SHALL CONFORM TO THE SPECIFICATIONS AND STANDARDS AS CONTAINED IN THE LATEST EDITION OF THE AISC STEEL CONSTRUCTION MANUAL.

ALL STRUCTURAL SHAPES, BARS, PLATES AND SHEETS SHALL BE OF STEEL MEETING ASTM A-36 SPECIFICATIONS.

ALL WELDING SHALL BE BY THE SHIELDED ARC METHOD AND SHALL CONFORM TO AWS CODE FOR ARC AND GAS WELDING IN BUILDING CONSTRUCTION. QUALIFICATIONS OF WELDERS SHALL BE IN ACCORDANCE WITH THE SPECIFICATIONS FOR STANDARD QUALIFICATION PROCEDURE OF THE AWS.

CONCRETE (EXCEPT PRECAST CONCRETE)

UNLESS OTHERWISE NOTED OR SPECIFIED, ALL STRUCTURAL CONCRETE SHALL DEVELOP A MINIMUM COMPRESSIVE STRENGTH OF 4,000 PSI IN 28 DAYS.

REINFORCEMENT STEEL SHALL BE DEFORMED BARS CONFORMING IN QUALITY TO THE REQUIREMENTS OF THE "SPECIFICATIONS FOR DEFORMED BILLET-STEEL BARS FOR CONCRETE REINFORCEMENT" ASTM DESIGNATION A-615, GRADE 60. GRADE 40 MAY BE USED FOR #3 AND #4 STIRRUPS.

COLUMN SPIRALS SHALL CONFORM TO "SPECIFICATION FOR COLD-DRAWN STEEL WIRE FOR CONCRETE REINFORCEMENT" ASTM DESIGNATION A-82.

ALL DETAILING, FABRICATION AND PLACING OF REINFORCING BARS, UNLESS OTHERWISE NOTED, SHALL BE IN ACCORDANCE WITH THE "MANUAL OF STANDARD PRACTICE FOR DETAILING REINFORCED CONCRETE STRUCTURES" ACI-315, LATEST EDITION.

TOLERANCES IN PLACING REINFORCEMENT SHALL BE:
±3/8 INCH FOR MEMBERS WITH D≤ 8 INCHES
±1/2 INCH FOR MEMBERS WITH D> 8 INCHES

ALL KEYWAYS IN CONSTRUCTION JOINTS SHALL BE ROUGH AND THOROUGHLY CLEANED FOR BOND.

DOWELS, PIPES, WATERSTOPS AND OTHER INSTALLED MATERIALS AND ACCESSORIES SHALL BE HELD SECURELY IN POSITION WHILE CONCRETE IS BEING PLACED.

UNLESS OTHERWISE SHOWN, ASIDE FROM NORMAL ACCESSORIES USED TO HOLD REINFORCING BARS FIRMLY IN POSITION, THE FOLLOWING SHALL BE ADDED:
A) IN SLABS #5 RISER BARS AT 36 INCHES O.C. MAXIMUM TO SUPPORT TOP REINFORCING BARS.
B) IN WALLS WITH 2 CURTAINS #3 U OR Z SHAPE SPACERS AT 6 FEET O.C. EACH WAY.

METAL CLIPS OR SUPPORTS SHALL NOT BE PLACED IN CONTACT WITH THE FORMS OR THE SUBGRADE. CONC. BLOCKS (OR DOBBIES) SUPPORTING BARS ON SUBGRADE SHALL BE IN SUFFICIENT NUMBERS TO SUPPORT THE BARS WITHOUT SETTLEMENT, BUT IN NO CASE SHALL SUCH SUPPORT BE CONTINUOUS.

DOWELS SHALL BE WIRED OR OTHERWISE HELD IN POSITION. THEY SHALL NOT BE SHOVED INTO FRESHLY PLACED CONCRETE.

UNLESS OTHERWISE NOTED ON THE DRAWINGS, SPLICES OF REINFORCEMENT SHALL BE AS SHOWN ON DETAIL S-139.

LOCATE TWO 3/4" GALV. RICHMOND ROCKET INSERTS, HOHMANN & BARNARD OR EQUAL, STRADDLING CENTER LINE OF EQUIPMENT OVER ALL PUMPS, METERS OR OTHER MECHANICAL UNITS OF MORE THAN 100 LBS. FOR INSERTING LIFTING EYES IF NOT OTHERWISE SHOWN ON THE DRAWINGS.

REINFORCING BARS AND ACCESSORIES SHALL NOT BE IN CONTACT WITH ANY PIPE, PIPE FLANGE OR METAL PARTS EMBEDDED IN CONCRETE. A MINIMUM OF 2 INCHES CLEARANCE SHALL BE PROVIDED AT ALL TIMES.

MASONRY

CONCRETE BLOCK MASONRY SHALL BE LIGHTWEIGHT, HOLLOW UNITS CONFORMING TO ASTM C90, GRADE N. SIZE OF UNITS, COLOR AND TEXTURE SHALL BE PER SPECIFICATIONS.

GROUT ALL CELLS OR CONCRETE BLOCK MASONRY UNLESS OTHERWISE NOTED ON DRAWINGS.

BAR SPLICES SHALL BE 40 BAR DIAMETER UNLESS OTHERWISE NOTED.

MORTAR SHALL BE IN ACCORDANCE WITH TABLE 24-A OF U.B.C. TYPE S AND SHALL HAVE MINIMUM COMPRESSIVE STRENGTH AT 28 DAYS OF 1800 PSI. GROUT SHALL BE IN ACCORDANCE WITH PARA. 2403 (5) OF THE U.B.C. AND SHALL HAVE A MINIMUM COMPRESSIVE STRENGTH OF 2000 PSI.

UNLESS OTHERWISE SPECIFIED, SPECIAL INSPECTION SHALL BE PROVIDED FOR ALL MASONRY WORK.

ALUMINUM

ALUMINUM CONSTRUCTION SHALL BE IN ACCORDANCE WITH AMERICAN SOCIETY OF CIVIL ENGINEERS SPECIFICATIONS FOR STRUCTURES OF ALUMINUM ALLOY 6061-T6. ALUMINUM SURFACES SHALL BE PREVENTED FROM COMING IN DIRECT CONTACT WITH CONCRETE OR WITH METALS NOT COMPATIBLE WITH ALUMINUM, USING METHODS DESCRIBED IN THE SPECIFICATIONS.

TESTING HYDRAULIC STRUCTURES

WHEN FILLING THE STRUCTURES WITH WATER FOR THE TEST REQUIRED IN THE SPECIFICATIONS, ALL VARIOUS BASINS LOCATED IN THE SAME STRUCTURE SHALL BE FILLED SIMULTANEOUSLY AT THE SAME RATE IN ORDER TO KEEP THE SAME LEVEL IN EACH BASIN.

STAINLESS STEEL

UNLESS OTHERWISE SHOWN OR SPECIFYED, STAINLESS STEEL SHALL BE TYPE 316.

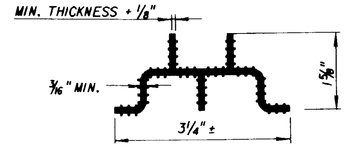

2 - RIB WATERSTOP — S-101 — REV 061588 — JMM

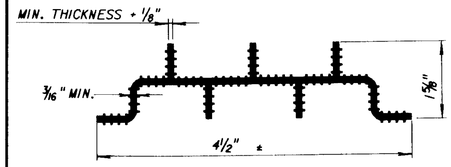

3 - RIB WATERSTOP — S-102 — REV 061588 — JMM

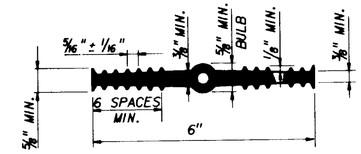

6" CENTER-BULB WATERSTOP — S-103 — REV 061588 — JMM

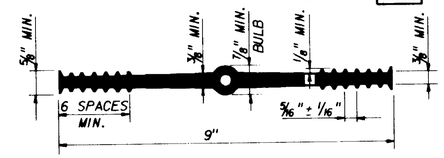

9" CENTER-BULB WATERSTOP — S-104 — REV 061588 — JMM

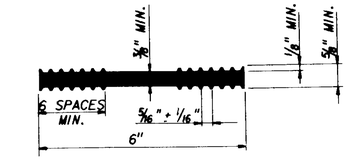

6" FLATSTRIP WATERSTOP — S-105 — REV 061588 — JMM

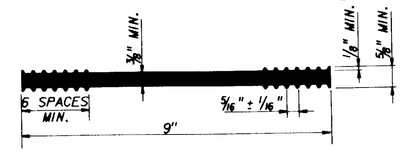

9" FLATSTRIP WATERSTOP — S-106 — REV 061588 — JMM

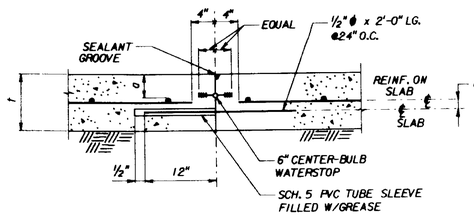

SINGLE MAT REINF. - SLEEVE - TYPE JOINT
(TYP. CONSTRUCTION JOINT UNLESS OTHERWISE NOTED)

WITH WATERSTOP AND SEALANT GROOVE — S-110 — REV 061588 — JMM

NO WATERSTOP OR SEALANT GROOVE — S-111 — REV 061588 — JMM

t	a
6"	2"
7"	2 1/2"
8"	2 1/2"

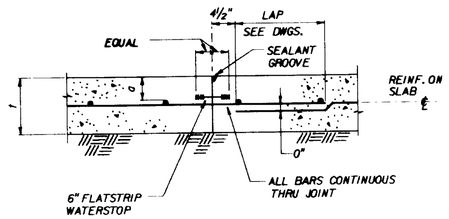

SINGLE MAT REINF. - CONTINUOUS THRU JOINT
(ONLY WHEN SPECIFIED ON DRAWINGS)

WITH WATERSTOP AND SEALANT GROOVE — S-112 — REV 061588 — JMM

NO WATERSTOP OR SEALANT GROOVE — S-113 — REV 061588 — JMM

NOTES:
1. IN ALL CONSTRUCTION JOINTS WITH WATERSTOPS APPLY 2 COATS OF BOND BREAKER TO FACE OF JOINT. AVOID COATING WATERSTOP (AND SEALANT GROOVE WHERE USED).
2. WATERSTOPS AND SEALANT GROOVES TO BE PROVIDED IN ALL WATER RETAINING SLABS. SEE DWGS. FOR OTHER LOCATIONS WHERE THEY MAY BE REQUIRED.

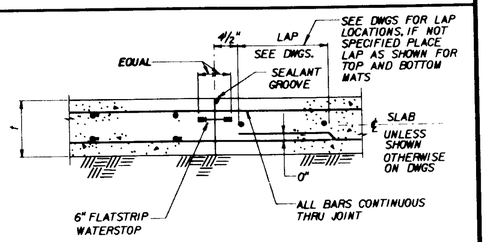

DOUBLE MAT REINF.

WITH WATERSTOP AND SEALANT GROOVE — S-114 — REV 061588 — JMM

NO WATERSTOP OR SEALANT GROOVE — S-115 — REV 061588 — JMM

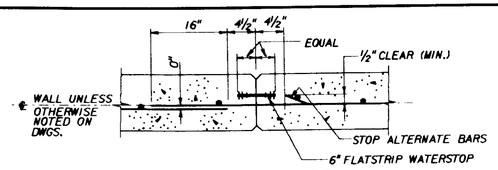

SINGLE CURTAIN REINF.

WITH WATERSTOP — S121 — REV 061588 — JMM

NO WATERSTOP — S-122 — REV 061588 — JMM

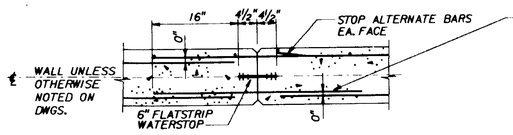

DOUBLE CURTAIN REINF.

WITH WATERSTOP — S-123 — REV 061588 — JMM

NO WATERSTOP — S-124 — REV 061588 — JMM

OPTIONAL DOWELING METHOD USE SAME METHOD EA. FACE DOWELS TO MATCH ALTERNATE WALL BARS. THIS METHOD MAY ALSO BE USED FOR SINGLE CURTAIN REINF.

NOTES:
1. IN ALL WALL CONSTRUCTION JOINTS WITH WATERSTOPS APPLY 2 COATS OF BOND BREAKER TO FACE OF JOINT AVOID COATING WATERSTOP.
2. WHERE WATERSTOP IS REQUIRED IN SINGLE CURTAIN WALL REINF. PLACE WATERSTOP ON WATER SIDE OF WALL.
3. UNLESS OTHERWISE NOTED 3/4" CHAMFERS SHALL BE OMITTED IN SURFACES TO RECEIVE ARCHITECTURAL TREATMENT

WALL CONSTRUCTION JOINT DETAILS

UNLESS OTHERWISE NOTED #5 AND LARGER HORIZONTAL BARS ALL BARS CONT. THRU JOINT.

#4 HORIZONTAL BARS ALTERNATE BARS STOPPED AT JOINT.

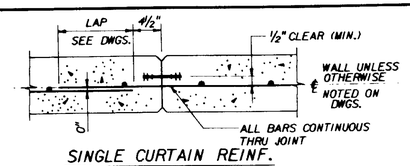

SINGLE CURTAIN REINF.

WITH WATERSTOP — S-125 — REV 061588 — JMM

NO WATERSTOP — S-126 — REV 061588 — JMM

04701

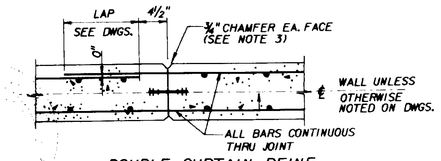

DOUBLE CURTAIN REINF.

WITH WATERSTOP — S-127 — REV 061588 — JMM

NO WATERSTOP — S-128 — REV 061588 — JMM

SECTION CALL-OUT

SECTION NO. — 2 / S-5 — SHEET ON WHICH SECTION IS SHOWN

SECTION 2 / S-1 — SHEET ON WHICH SECTION IS CUT

DETAIL CALL-OUT

A / S-6 — SHEET ON WHICH DETAIL IS SHOWN

DETAIL A / S-4 — SHEET ON WHICH DETAIL IS CALLED-OUT

STANDARD DETAIL CALL-OUT

S-103 / GS-2 — SHEET ON WHICH DETAIL IS SHOWN

DETAIL S-103 JMM — JMM LOGO

THE DETAILS ILLUSTRATED ON SHEETS GS-1 THRU GS-6 ARE PART OF JAMES M. MONTGOMERY STANDARD DETAILS.

THESE DETAILS ARE TO BE USED WHEN REFERRED TO OR WHEN NO OTHER MORE RESTRICTIVE OR DIFFERENT DETAILS ARE SHOWN ON THE DRAWINGS.

DETAILS NOT PERTAINING TO THE PROJECT ARE MARKED THUS N. I. C. (NOT IN CONTRACT)

UNLESS OTHERWISE SHOWN ON THE DRAWINGS CONCRETE COVER FOR REINFORCING BARS SHALL BE AS FOLLOWS:

FOR CONCRETE PLACED AGAINST EARTH	3"
FOR SURFACES ON CONTACT WITH WATER	2 1/2"
FORMED SURFACES IN CONTACT WITH EARTH	2"
FOR UNDERSIDE OF SLABS OVER WATER IN ENCLOSED CONDUITS, BEAMS AND COLUMNS NOT IN CONTACT WITH EARTH OR WATER	1 1/2"
FOR SURFACES EXPOSED TO WEATHER AND INTERIOR SURFACES (EXCEPT BEAMS AND COLUMNS) NOT IN CONTACT WITH EARTH OR WATER	1"

UNLESS OTHERWISE NOTED, WALLS AND SLABS SHOWN WITH A SINGLE LAYER OF REINFORCEMENT SHALL HAVE THAT REINFORCEMENT CENTERED.

CONCRETE PROTECTION FOR REINFORCEMENT — S-199 — REV 090188 — JMM
(CAST-IN-PLACE CONCRETE)

PROJECT RECORD DOCUMENT
C.W Roen Const Co.
P.O 4, Danville, CA 94526
DATE: 12-3-91 By:

JOB No. • FILE No. LVX_STRL\XGSLIDGN

REV	DATE	BY	DESCRIPTION

SCALE:

WARNING: 0 1/2 1 — IF THIS BAR DOES NOT MEASURE 1" THEN DRAWING IS NOT TO SCALE.

DESIGNED / DRAWN / CHECKED

SUBMITTED: PROJECT ENGINEER — R. C. E. NO. 41019 — DATE 11/26/90
JAMES M. MONTGOMERY CONSULTING ENGINEERS, INC. — R. C. E. NO. 33699 — DATE 11/26/90

JMM James M. Montgomery Consulting Engineers, Inc.
Pasadena, California

APPROVED — DATE
APPROVED — DATE

LAS VIRGENES MWD / TRIUNFO CSD
TAPIA WRF - REGIONAL FACILITIES EXPANSION IV
FILTRATION / DISINFECTION ADDITION

GENERAL NOTES AND CONST. JOINT DETAILS

SHEET GS-1 OF 110 SHEETS

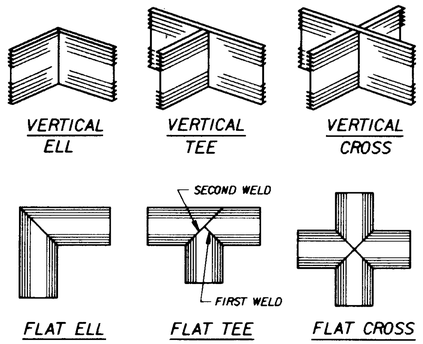

FLATSTRIP WATERSTOPS PREFABRICATED JOINTS — S-108 — REV 061588 — JMM

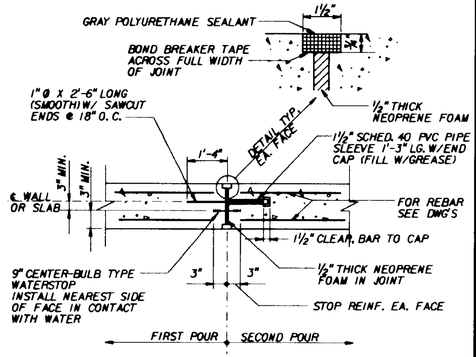

WALL OR SLAB EXPANSION JOINT — S-116 — REV 061588 — JMM

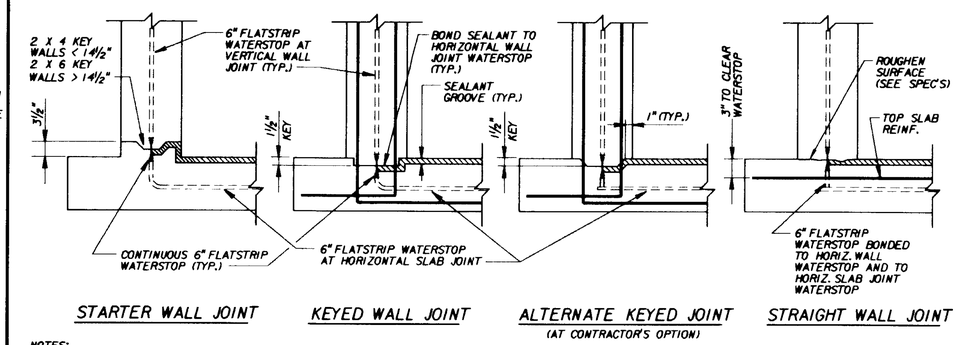

NOTES:

1. SEALANT GROOVE SHALL BE CONTINUED UNDER WALL & SEALANT SHALL BOND WITH WALL WATERSTOP IN ALL CASES WHERE SUCH WATERSTOP OCCURS.
2. SEALANT UNDER WALL SHALL BE IN PLACE PRIOR TO PLACEMENT OF CONCRETE FOR WALL.

CONSTRUCTION JOINT DETAILS WALL TO FOUNDATION — S-118 — REV 061588 — JMM

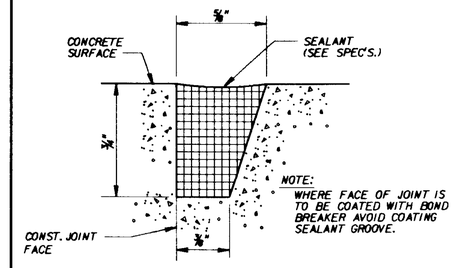

SEALANT GROOVE — S-131 — REV 061588 — JMM

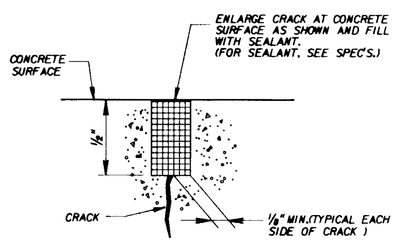

NOTE:

PRIOR TO FILLING, STRUCTURES TO CONTAIN WATER SHALL HAVE ALL CRACKS REPAIRED AS SHOWN IN THIS DETAIL.

CONCRETE CRACK REPAIR — S-132 — REV 061588 — JMM

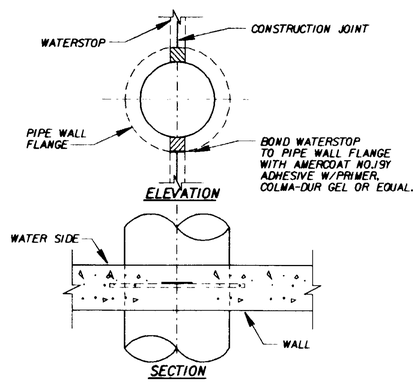

CONSTRUCTION JOINT DETAILS AT PIPE OPENINGS — S-133 — REV 061588 — JMM

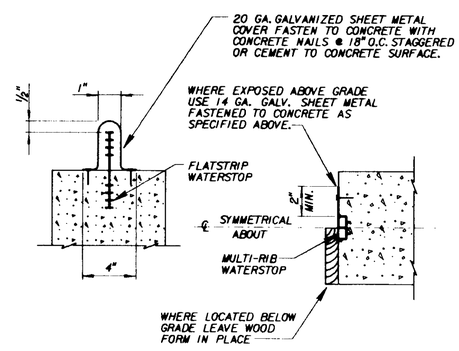

PROTECTIVE COVERS FOR EXPOSED WATERSTOPS — S-135 — REV 061588 — JMM

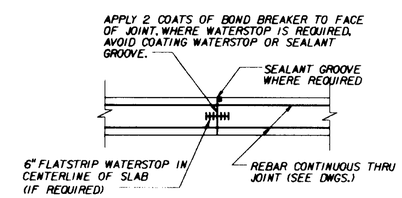

SUSPENDED SLAB CONSTRUCTION JOINT DETAIL — S-137 — REV 061588 — JMM

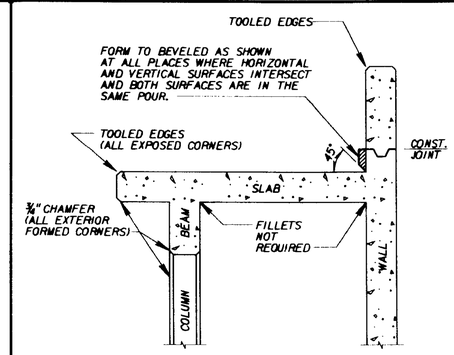

FORMING DETAILS — S-152 — REV 061588 — JMM

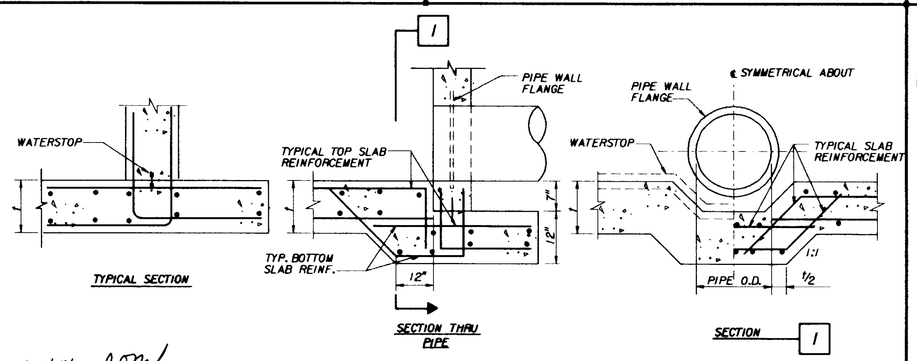

08.24.94 C. O'Neal

PROJECT RECORD DOCUMENT
C W Roen Const Co.
P O 4 Danville, CA 94526
DATE: _____ By: _____

FOOTING DETAIL AT WALL PIPE CONNECTION — S-150 — REV. 061588 — JMM

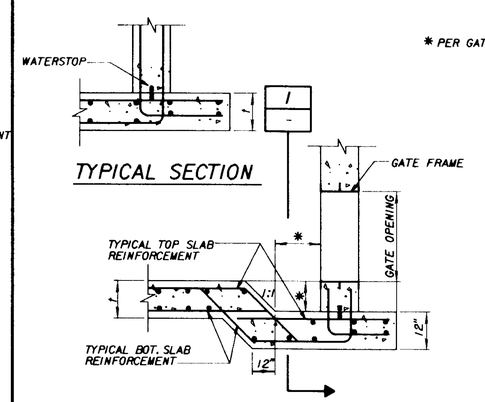

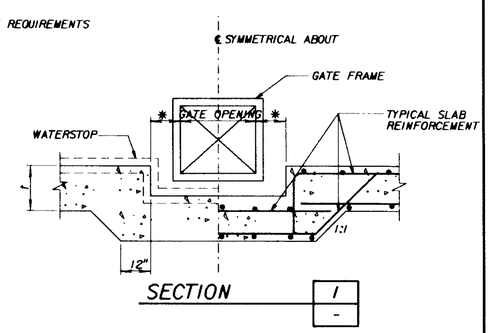

FLOOR SLAB POCKET FOR SLUICE GATE INSTALLATION — S-151 — REV.061588 — JMM

TREAD SHALL RECEIVE A STEEL TROWEL FINISH. IMMEDIATELY THEREAFTER, THE SURFACE SHALL BE SLIGHTLY ROUGHENED BY DRAWING A STIFF BRUSH OVER THE SURFACE AT A RIGHT ANGLE TO THE DIRECTION OF TRAFFIC TO PRODUCE A NON-SKID SURFACE.

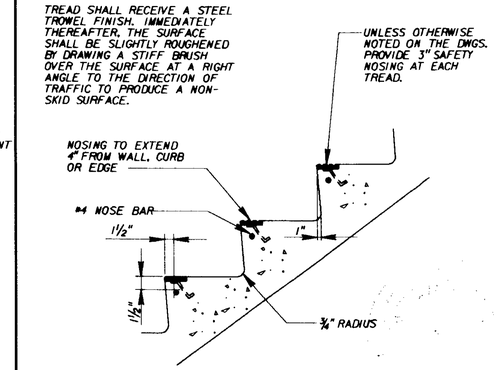

CONCRETE STAIR DETAIL — S-153 — REV 061588 — JMM

04702

REV	DATE	BY	DESCRIPTION

SCALE:

WARNING: 0 ½ — IF THIS BAR DOES NOT MEASURE 1" THEN DRAWING IS NOT TO SCALE.

DESIGNED / DRAWN / CHECKED

SUBMITTED: Jorge M. Lacer — PROJECT ENGINEER — 41019 R. C. E. NO. — 11/26/90 DATE

JAMES M. MONTGOMERY CONSULTING ENGINEERS, INC. — 33699 R. C. E. NO. — 11/26/90 DATE

JMM James M. Montgomery Consulting Engineers, Inc. — Pasadena, California

APPROVED — DATE

APPROVED — DATE

LAS VIRGENES MWD / TRIUNFO CSD
TAPIA WRF - REGIONAL FACILITIES EXPANSION IV
FILTRATION / DISINFECTION ADDITION

STANDARD JOINT DETAILS

SHEET GS-2 OF 110 SHEETS

JOB No. ____ FILE No. LVX STRULVXGS2.DGN

BAR SIZE	f'C = 3000 psi GRADE 40	f'C = 3000 psi GRADE 60	f'C = 4000 psi GRADE 40	f'C = 4000 psi GRADE 60
#3	20"	20"	20"	20"
#4	20"	20"	20"	20"
#5	20"	26"	20"	26"
#6	22"	33"	20"	31"
#7	31"	45"	26"	39"
#8	39"	59"	34"	51"
#9	49"	74"	43"	65"
#10	63"	98"	55"	82"
#11	78"	118"	67"	101"

STANDARD BAR SPLICES

S-139

(UNLESS OTHERWISE NOTED ON THE DWGS.) REV 061588 JMM

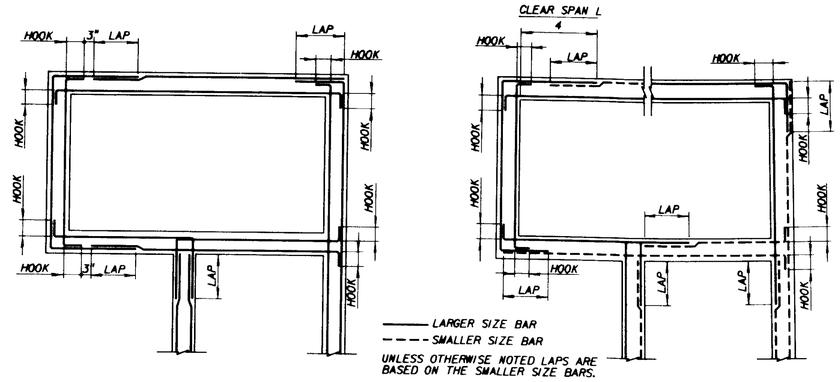

HORIZONTAL REINFORCEMENT AT WALL INTERSECTIONS

S-141

REV 061588 JMM

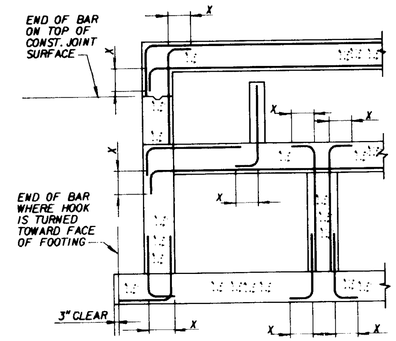

SECTION

GRADE 40 OR 60 REINF. STEEL

BAR SIZE	90 HOOKS "X"
#3	6"
#4	8"
#5	10"
#6	12"
#7	14"
#8	16"
#9	19"
#10	22"
#11	24"

STANDARD 90° BAR HOOKS

S-143

UNLESS OTHERWISE NOTED ON DWGS. REV 061588 JMM

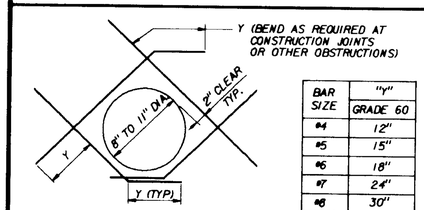

BAR SIZE	"Y" GRADE 60
#4	12"
#5	15"
#6	18"
#7	24"
#8	30"

1. CUT NORMAL REINFORCEMENT CLEAR OF OPENING.
2. DIAGONAL BARS TO BE PLACED:
   A. AT ℄ OF WALL OR SLAB WHERE ONE LAYER OF REINFORCEMENT IS PROVIDED.
   B. AT EACH FACE OF WALL OR SLAB WHERE TWO LAYERS OF REINFORCEMENT ARE PROFIDED.
3. UNLESS OTHERWISE NOTED, SIZE OF DIAGONAL BARS SHALL BE THE SIZE OF THE LARGEST NORMAL REINF. BAR CUT.
4. THIS DETAIL TO BE USED ONLY WHEN CALLED FOR ON THE DRAWINGS OR WHEN NO OTHER DETAIL IS SPECIFIED.

DIAGONAL REINFORCEMENT AT CIRCULAR OPENINGS

S-142

REV 061588 JMM

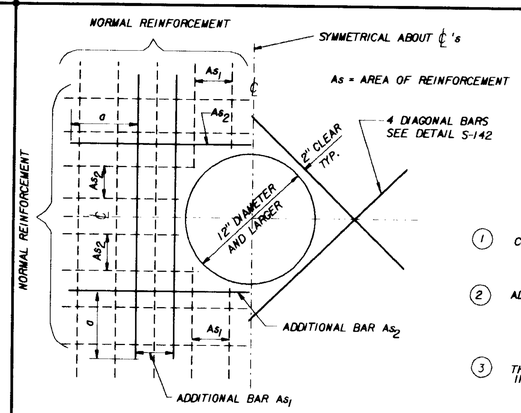

BAR SIZE	"d" GRADE 60
#4	15"
#5	21"
#6	24"
#7	27"
#8	36"
#9	42"
#10	48"

1. CUT NORMAL REINFORCEMENT AT OPENINGS: AS_1 AND AS_2 = ½ AREA OF CUT BARS TO BE ADDED ON EACH SIDE OF OPENING.
2. ADDITIONAL BARS AS_1 AND AS_2 TO BE PLACED
   a) AT ℄ OF WALLS OR SLABS WHERE ONE LAYER OF REINFORCEMENT IS PROVIDED.
   b) AT EACH FACE OF WALLS OR SLABS WHERE TWO LAYERS OF REINFORCEMENT ARE PROVIDED.
3. THIS DETAIL TO BE USED ONLY WHEN NO OTHER DETAIL IS INDICATED ON THE DRAWINGS.

ADDITIONAL REINFORCEMENT AT CIRCULAR OPENINGS

S-144

REV 061588 JMM

NOTES:

1. SPLICES SHALL BE WELDED PER UBC STD. NO. 26-8, AWS D1.4-79 AND MEET THE REQUIREMENTS OF ACI SECTION 12.15.3.
2. SURFACES DO NOT HAVE TO BE SQUARE CUT. BEVELS CAN BE CUT WITH A TORCH.
3. CHIP OR GRIND ROOT TO SOUND METAL BEFORE WELDING SECOND SIDE.
4. BARS MUST BE PLUMB AND PRECISELY LOCATED IN ORDER TO BE PROPERLY WELDED.
5. WRAP BARS WITH FIBERGLASS CLOTH AFTER WELDING IS COMPLETED TO ALOW SLOW COOLING.
6. BACKING IS REQUIRED FOR SINGLE - V -GROOVE AND SINGLE - BEVEL - GROOVE WELDS FOR #8 AND #7 BARS.

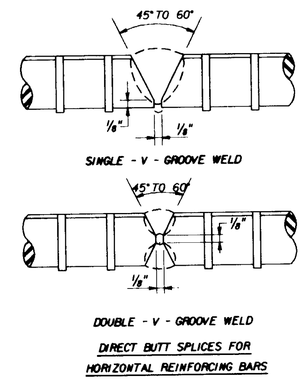

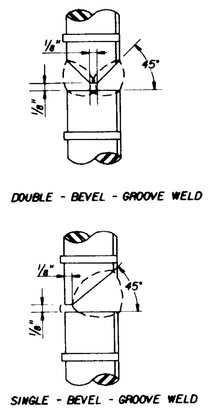

WELDED SPLICES FOR REINFORCING BARS #7 AND LARGER

S-145

REV 061588 JMM

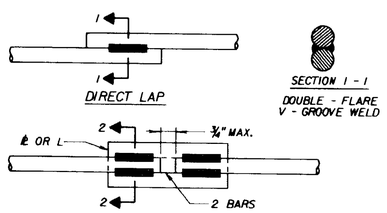

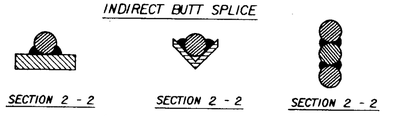

WELDED SPLICES FOR REINFORCING BARS #6 AND SMALLER

S-146

REV 061588 JMM

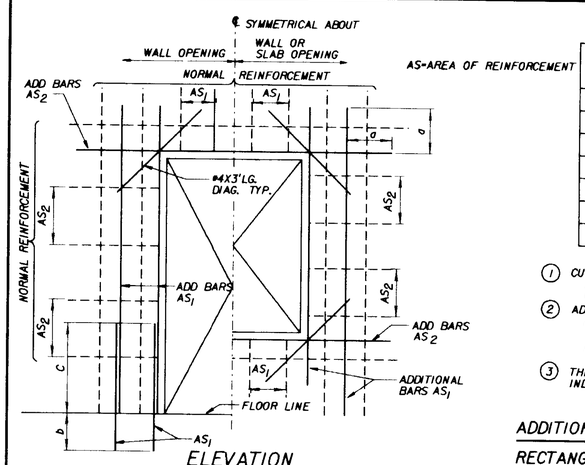

ELEVATION

AS=AREA OF REINFORCEMENT

BAR SIZE	GRADE 40 a	GRADE 40 b	GRADE 40 c	GRADE 60 a	GRADE 60 b	GRADE 60 c
#4	16"	12"	20"	16"	12"	20"
#5	16"	15"	20"	20"	15"	26"
#6	17"	15"	22"	24"	18"	31"
#7	23"	18"	31"	30"	24"	39"
#8	30"	24"	39"	39"	30"	51"
#9	38"	30"	49"	49"	38"	65"
#10	48"	36"	63"	63"	48"	82"

1. CUT NORMAL REINFORCEMENT AT OPENING: AS_1 AND AS_2 = ½ AREA OF CUT BARS TO BE ADDED ON EACH SIDE OF OPENING.
2. ADDITIONAL BARS AS_1 AND AS_2 TO BE PLACED:
   a) AT ℄ OF WALLS OR SLABS WHERE ONE LAYER OF REINFORCEMENT IS PROVIDED.
   b) AT EACH FACE OF WALLS OR SLABS WHERE TWO LAYERS OF REINFORCEMENT ARE PROVIDED.
3. THIS DETAIL TO BE USED ONLY WHEN NO OTHER DETAIL IS INDICATED ON THE DRAWINGS.

ADDITIONAL REINFORCEMENT AROUND RECTANGULAR OPENINGS

S-148

REV 061588 JMM

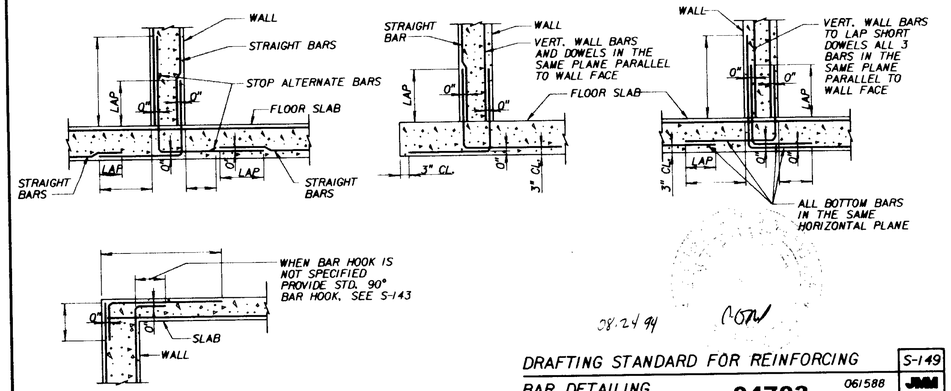

08.24.94

DRAFTING STANDARD FOR REINFORCING BAR DETAILING

S-149

061588 JMM

04703

PROJECT RECORD DOCUMENT
C.W. Rogers Const Co.
P.O. & Danville, CA 94526
DATE 1.27.94 By

FILE No. LVX STRLVXGS3.DGN

JOB No.

REV	DATE	BY	DESCRIPTION

SCALE:

WARNING: 0 ½ 1 — IF THIS BAR DOES NOT MEASURE 1" THEN DRAWING IS NOT TO SCALE.

DESIGNED
DRAWN
CHECKED

SUBMITTED: Jorge M. Pacas — PROJECT ENGINEER — 41019 R. C. E. NO. — 11/26/90 DATE

JAMES M. MONTGOMERY CONSULTING ENGINEERS, INC. — 33699 R. C. E. NO. — 11/26/90 DATE

JMM James M. Montgomery Consulting Engineers, Inc. Pasadena, California

APPROVED — DATE

APPROVED — DATE

LAS VIRGENES MWD / TRIUNFO CSD
TAPIA WRF - REGIONAL FACILITIES EXPANSION IV
FILTRATION / DISINFECTION ADDITION

STANDARD REINFORCEMENT DETAILS

SHEET GS-3 OF 110 SHEETS

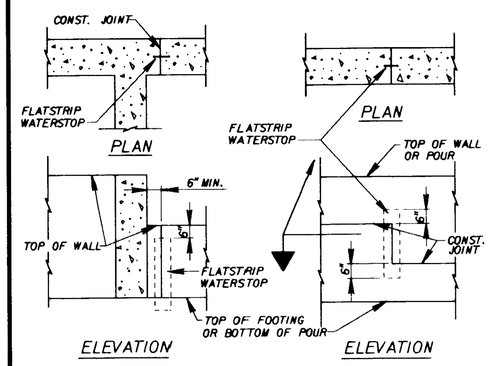

WATERSTOP DETAILS FOR VERTICAL WALL JOINTS — S-120 — REV 061588 — JMM

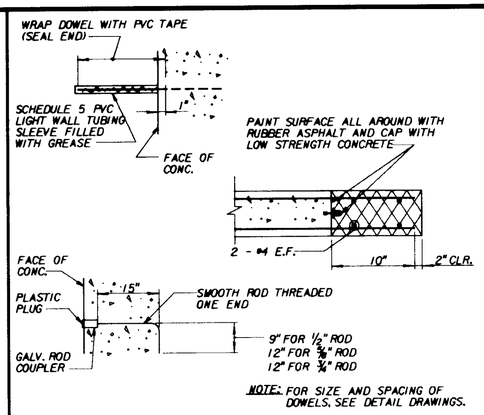

PROTECTION FOR EXPOSED DOWELS AND FUTURE BAR CONNECTIONS — S-134 — REV 061588 — JMM

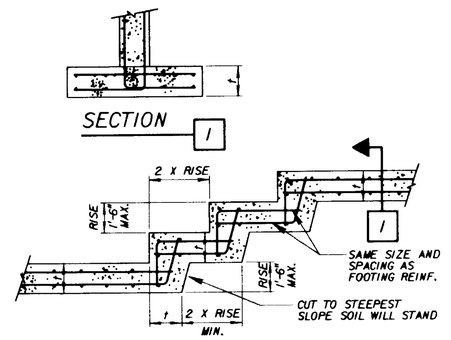

STEPPED FOOTING DETAIL — S-155 — REV.061588 — JMM

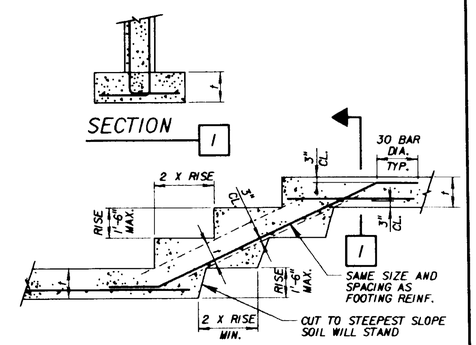

STEPPED FOOTING DETAIL — S-156 — REV.061588 — JMM

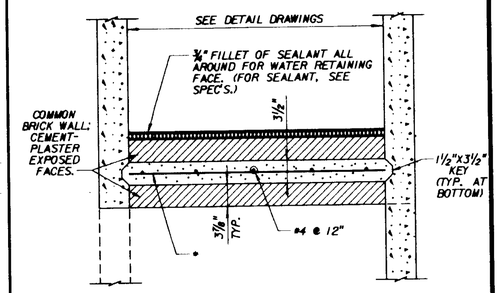

TEMPORARY CLOSURE WALL — REV 061588 — JMM

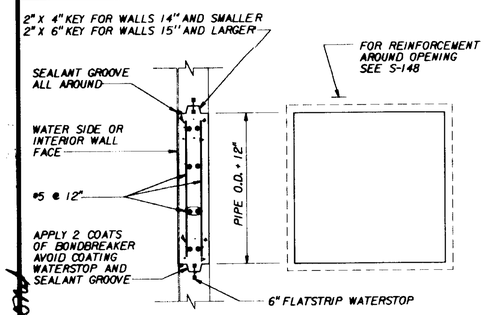

REMOVABLE WALL SECTION FOR FUTURE PIPING — S-159 — REV 061588 — JMM

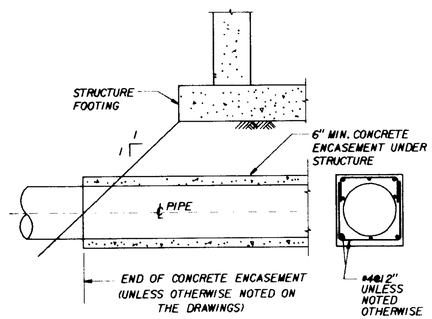

END OF PIPE ENCASEMENT UNDER STRUCTURES — S-170 — REV 061588 — JMM

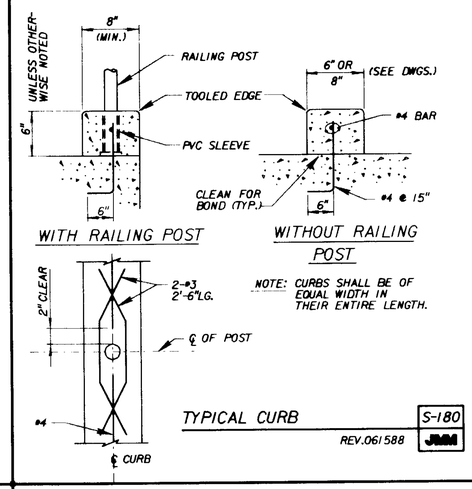

TYPICAL CURB — S-180 — REV.061588 — JMM

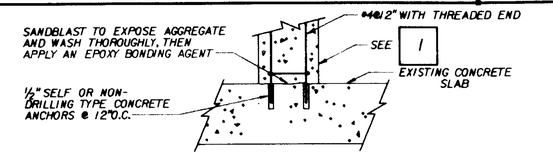

PIER OVER EXISTING SLAB — 3

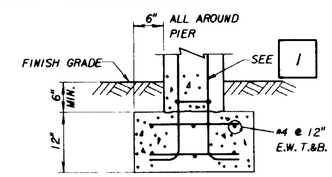

PIER ON GRADE — 2

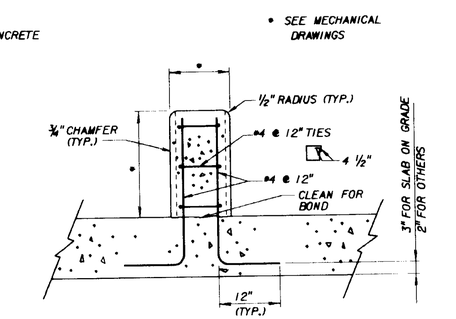

PIER OVER NEW SLAB — 1

CONCRETE PIER FOR PIPE SUPPORT — S-181 — REV.061588 — JMM

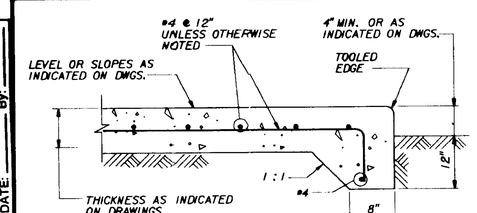

SLAB ON GRADE — S-190 — REV 090188 — JMM

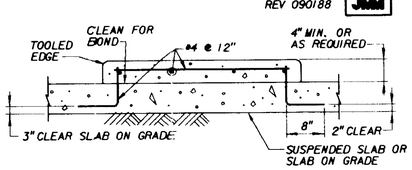

EQUIPMENT PAD — S-191 — REV 090188 — JMM

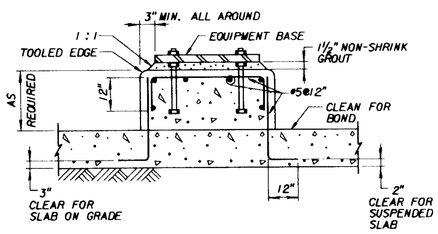

EQUIPMENT BASE — S-192 — REV.061588 — JMM

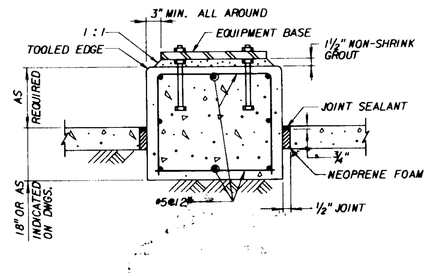

EQUIPMENT BASE ON GRADE WITH SEPARATING JOINT — S-193 — REV 061588 — JMM

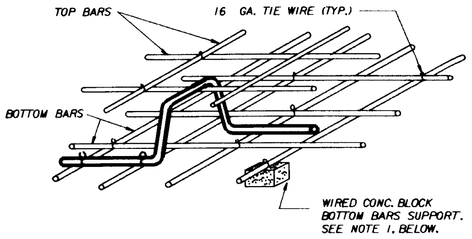

1. METAL BAR SUPPORTS, IF USED IN SLABS NOT ON GROUND, SHALL NOT MAKE CONTACT WITH FORMS.
2. REINFORCING BARS AND ACCESSORIES SHALL NOT BE IN CONTACT WITH ANY OTHER METAL INSTALLATION OR ACCESSORY EMBEDDED IN CONCRETE. A MINIMUM OF 2" CLEARANCE SHALL BE PROVIDED IN ALL CASES.

BAR CHAIR REINFORCEMENT SUPPORT — S-204 — REV 061588 — JMM

MANUFACTURER (OR EQUAL)	WATERTIGHT FLOOR HATCH W/ DIAMOND PLATE COVER	
	SINGLE - LEAF TYPE	DOUBLE - LEAF TYPE
BILCO	J	JD
BABCOCK - DAVIS	AM	GT
INRYCO / MILCOR	G	G

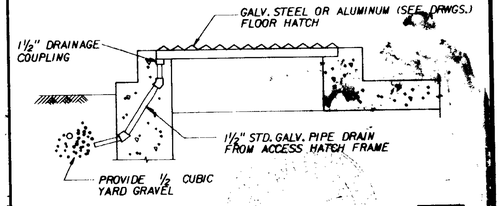

ACCESS HATCH DETAIL — S-531 — REV 061588 — JMM

04704

PROJECT RECORD DOCUMENT
C.W. Roen Const Co.
P.O. 4, Danville, CA 94526
DATE: ____ By: ____

JOB No. ____ FILE No. LVX STRL VXGS4.DGN

REV	DATE	BY	DESCRIPTION

SCALE:

WARNING: 0 1/2 — IF THIS BAR DOES NOT MEASURE 1" THEN DRAWING IS NOT TO SCALE.

DESIGNED ____ DRAWN ____ CHECKED ____

SUBMITTED: George M. Rocen — PROJECT ENGINEER — 41019 R. C. E. NO. — 11/26/90 DATE

Roy A. West — JAMES M. MONTGOMERY CONSULTING ENGINEERS, INC. — 33699 R. C. E. NO. — 11/26/90 DATE

JMM James M. Montgomery Consulting Engineers, Inc. — Pasadena, California

APPROVED: DISTRICT APPROVAL — DATE

APPROVED — DATE

LAS VIRGENES MWD / TRIUNFO CSD
TAPIA WRF - REGIONAL FACILITIES EXPANSION IV
FILTRATION / DISINFECTION ADDITION

STANDARD MISCELLANEOUS DETAILS

SHEET GS-4 OF 110 SHEETS

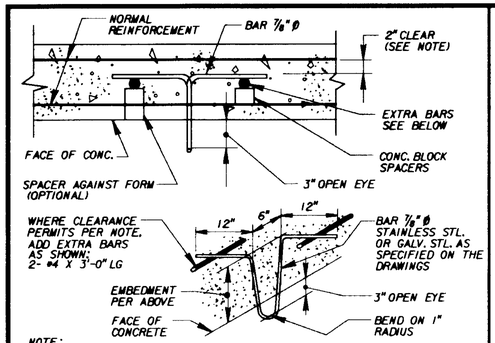

NOTE:
EYE BAR AND EXTRA SUPPORT BARS SHALL NOT BE IN CONTACT WITH NORMAL REINFORCING BARS OR ANY OTHER METAL INSTALLATION OR ACCESSORY EMBEDDED IN CONCRETE.

LIFTING EYE DETAILS — S-194

REV 061588 JMM

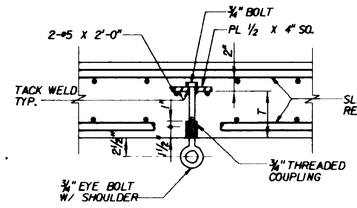

NOTES:

1. ALL METAL PARTS SHALL BE GALV. STEEL.
2. A CLEARANCE OF 2" MIN. SHALL BE MAINTAINED BETWEEN THE LIFTING EYE ASSEMBLY AND THE REINFORCING STEEL.
3. LOAD CAPACITY T = 4" 2000#
   T = 5" 3000#
   T = 6" 4000#

LIFTING EYE — S-195

REV.061588 JMM

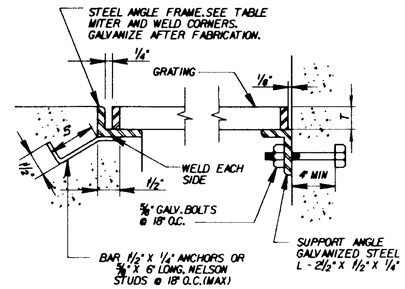

GRATING FRAME TABLE					
TYPE	GRATING DEPTH "T"	FRAME ANGLE	TYPE	GRATING DEPTH "T"	FRAME ANGLE
1	1"	1 3/4 X 1/4 X 1/4	5	2"	2 1/2 X 2 1/2 X 1/2
2	1 1/8"	2 X 1/2 X 1/4	6	2 1/4"	2 1/2 X 2 1/2 X 1/4
3	1 1/2"	1 3/4 X 1 3/4 X 1/4	7	2 1/2"	3 X 2 1/2 X 1/2
4	1 13/16"	2 X 2 X 1/4	8		

ALUMINUM GRATING — S-501

BEARING BARS: DEPTH "T" X 3/16" @ 1 3/16" O.C.
CROSS BARS @ 4" O.C.
USE ALUM. ANGLE SUPPORTS AND BOLTS
REV.061588 JMM

GALVANIZED STEEL GRATING

BEARING BARS: DEPTH "T" X 3/16" @ 1 3/16" O.C.
CROSS BARS @ 4" O.C.
PER DETAIL TO LEFT
REV.061588

STAINLESS STEEL GRATING

BEARING BARS: DEPTH "T" X 3/16" @ 1 3/16" O.C.
CROSS BARS @ 4" O.C.
USE STAINLESS STEEL ANGLE SUPPORTS AND BOLTS
REV.061588 JMM

GRATING OF DEPTH "T" AS NOTED ON DRAWINGS SHALL BE AS SPECIFIED HEREIN.
ALL ENDS AND OPENINGS SHALL BE BANDED.
ALL GRATINGS SHALL BE SECURED IN PLACE WITH REMOVABLE FASTENERS. SEE DETAIL S-517.
WEIGHT OF GRATING SECTION SHALL NOT EXCEED 80 LBS.

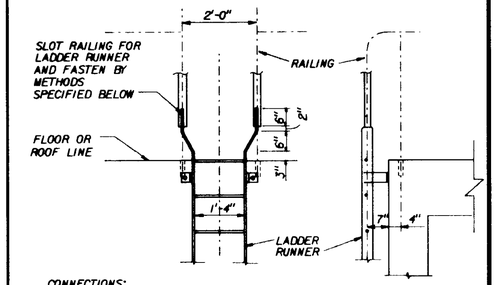

CONNECTIONS:
STEEL TO STEEL OR ALUMINUM TO ALUMINUM: WELDED CONNECTION. GRIND SMOOTH.
STEEL TO ALUMINUM: DRILL HOLE THRU LADDER RUNNER AND RAILING FOR 1/2" PIN. INSERT PIN AND WELD BOTH ENDS AND GRIND SMOOTH. PIN SHALL BE THE SAME MATERIAL AS RAILING.

LADDER TO RAILING CONNECTIONS — S-507

REV 061588 JMM

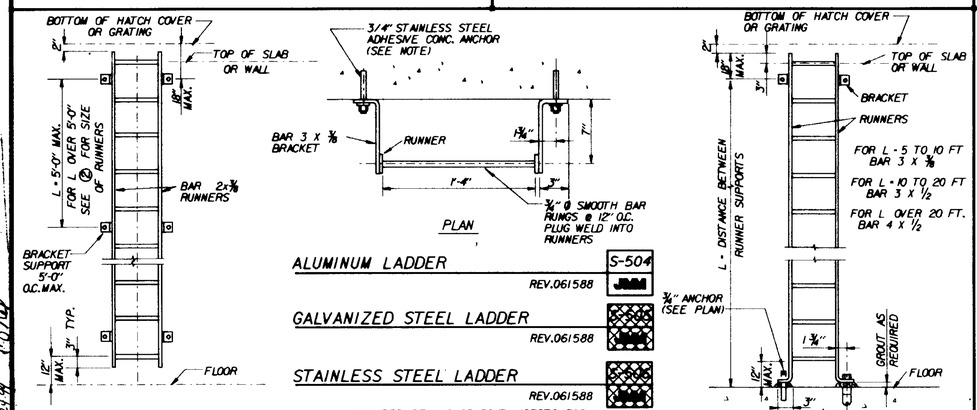

ALUMINUM LADDER — S-504

REV.061588 JMM

GALVANIZED STEEL LADDER

REV.061588

STAINLESS STEEL LADDER

REV.061588

NOTE: PROVIDE ANCHOR BOLT INSERTS FOR PRESTRESSED TANK WALL.

① STANDARD LADDER WITH RUNNER SUPPORTS AT 5'-0" O.C. MAX.

② LADDER WITH RUNNER SUPPORTS OVER 5'-0" O.C.

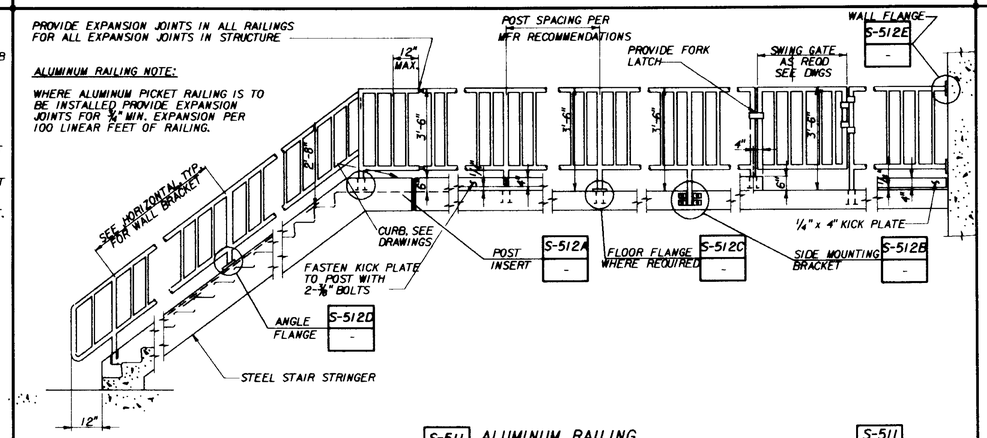

S-511 ALUMINUM RAILING — S-511

REV 061588 JMM

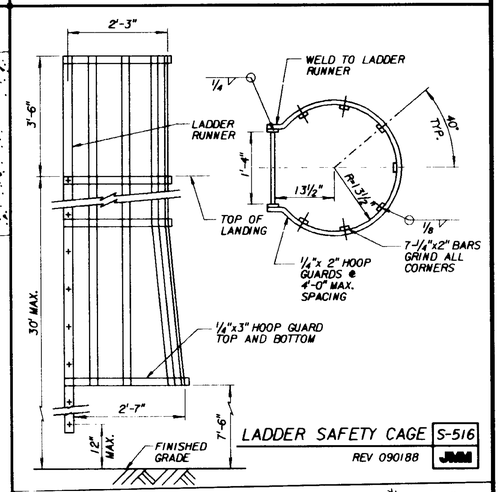

LADDER SAFETY CAGE — S-516

REV 090188 JMM

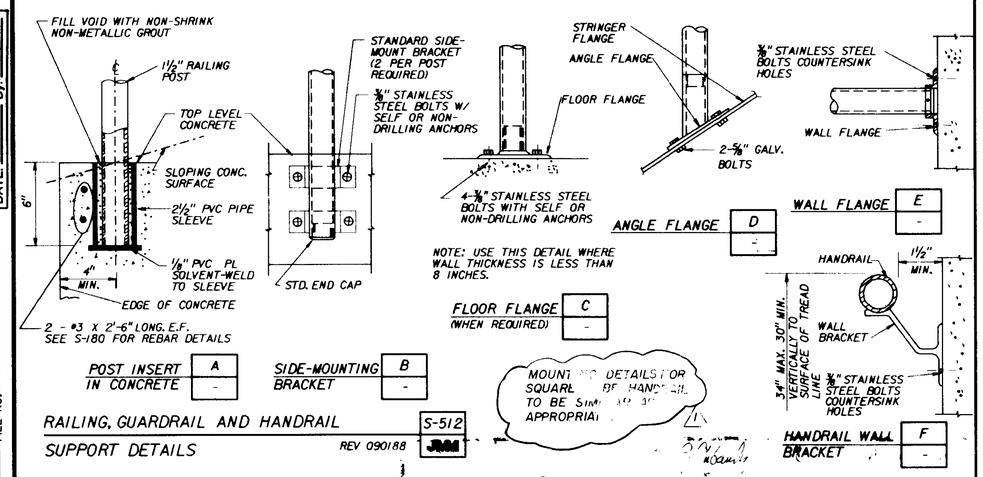

POST INSERT IN CONCRETE — A
SIDE-MOUNTING BRACKET — B
ANGLE FLANGE — D
WALL FLANGE — E
FLOOR FLANGE (WHEN REQUIRED) — C
HANDRAIL WALL BRACKET — F

MOUNT[illegible] DETAILS FOR SQUARE [illegible] OF HANDRAIL TO BE SIM[illegible] APPROPRIA[illegible]

RAILING, GUARDRAIL AND HANDRAIL SUPPORT DETAILS — S-512

REV 090188 JMM

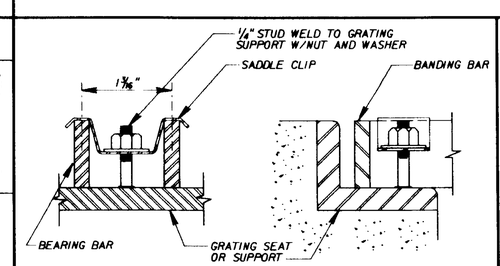

PROVIDE 4 CLIPS PER GRATING PANEL, APPROX. 4" FROM PANEL CORNERS. MAXIMUM CLIP SPACING AT 36" O.C.

STUD, NUT, WASHER AND CLIP TO BE THE SAME MATERIAL AS THE GRATING.

GRATING ANCHOR DETAIL — S-517

REV 061588 JMM

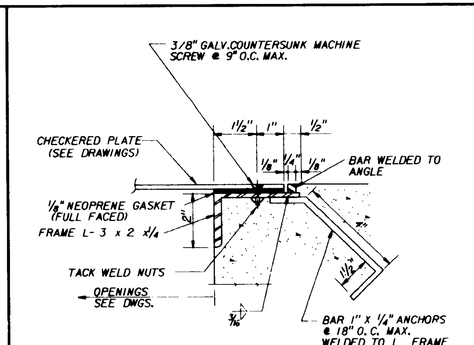

(GALVANIZE FRAME AFTER FABRICATION)

NOTE: FOR ALUMINUM OR STAINLESS STEEL PLATES USE MATCHING MATERIAL FOR FRAME AND FASTENERS.

TYPICAL PLATE-COVERED OPENING — S-518

REV 061588 JMM

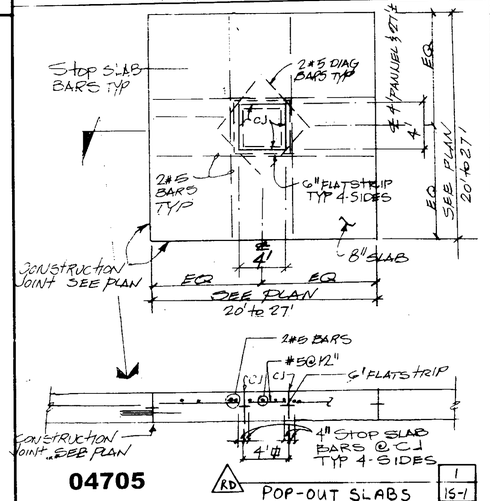

04705

RD POP-OUT SLABS — 1 / 15-1

PROJECT: RECORD DOCUMENT
C.W. Roen Const Co.
P.O. 4, Danville, CA 94526
DATE: 1/1/ By:

FILE No. LVX STRL VXGS5.DGN

JOB No.

REV	DATE	BY	DESCRIPTION
RD	7-18-94	BCS	DETAIL 1/15-1
1	4-25-94	MR	AS BID

SCALE:

WARNING: 0 1/2 1 — IF THIS BAR DOES NOT MEASURE 1" THEN DRAWING IS NOT TO SCALE.

DESIGNED / DRAWN / CHECKED

SUBMITTED: PROJECT ENGINEER — R. C. E. NO. 41019 — DATE 9/26/94
JAMES M. MONTGOMERY CONSULTING ENGINEERS, INC. — R. C. E. NO. 33699 — DATE 11/26/90

JMM James M. Montgomery Consulting Engineers, Inc.
Pasadena, California

APPROVED — DATE
APPROVED — DATE

LAS VIRGENES MWD / TRIUNFO CSD
TAPIA WRF - REGIONAL FACILITIES EXPANSION IV
FILTRATION / DISINFECTION ADDITION

STANDARD METALWORK DETAILS

SHEET GS-5 OF 110 SHEETS

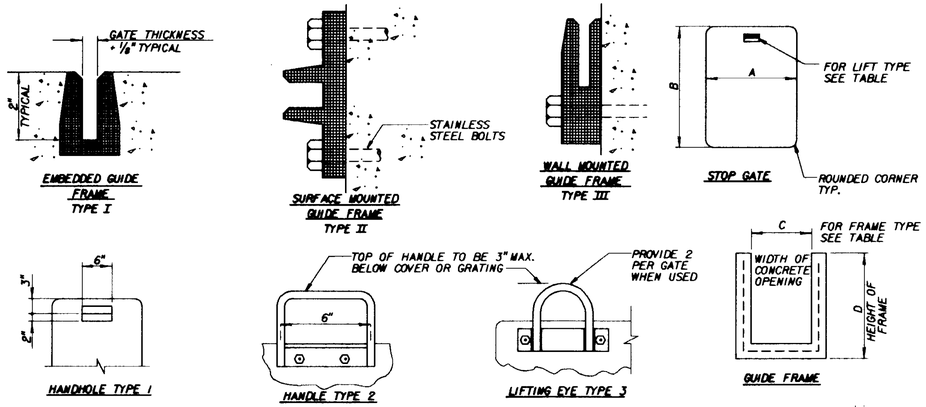

FIBERGLASS STOP GATE DETAILS — S-301

REV 061588 JMM

	STOP GATE							GUIDE FRAME			
REF. SHEET NUMBER	GATE NO.	NO. REQ'D	THICKNESS	A	B	NO. OF HANDLES	TYPE OF HANDLES	NO. OF FRAMES	TYPE OF FRAMES	C	D
4S-4	1	4	3/8"	3'-4"	2'-6"	1	1	4	1	3'-0"	5'-6"
1S-13	2	1	3/8"	2'-11"	3'-0"	1	1	1	1	2'-9"	3'-0"

REV 061588

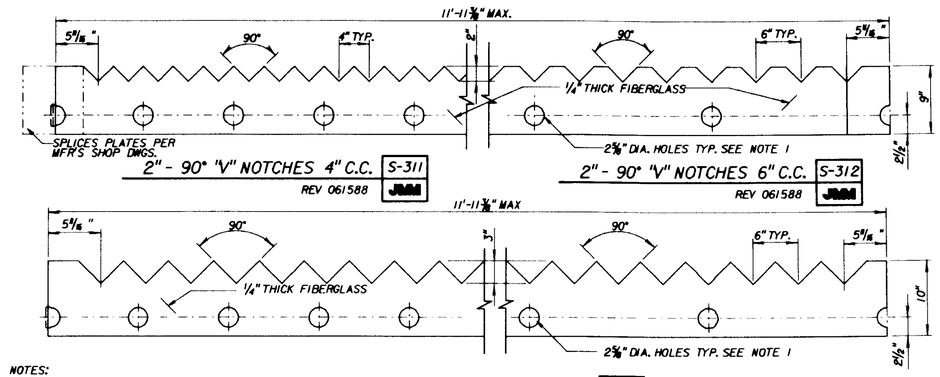

NOTES:

1. UNLESS OTHERWISE NOTED ON THE DRAWINGS HOLE SPACING TO BE, 12" O.C. FOR STRAIGHT WALLS. 24" O.C. FOR ROUND TANKS.
2. WEIR PLATE MOUNTING:
   A) AGAINST CONCRETE - 1/2" STAINLESS STEEL ANCHOR BOLTS AND NUTS.
   B) AGAINST FIBERGLASS TROUGH - 1/2" STAINLESS STEEL BOLTS AND NUTS.
   C) HOLD WEIR PLATE IN POSITION W/ 5" O.D. FIBERGLASS FLAT WASHERS.

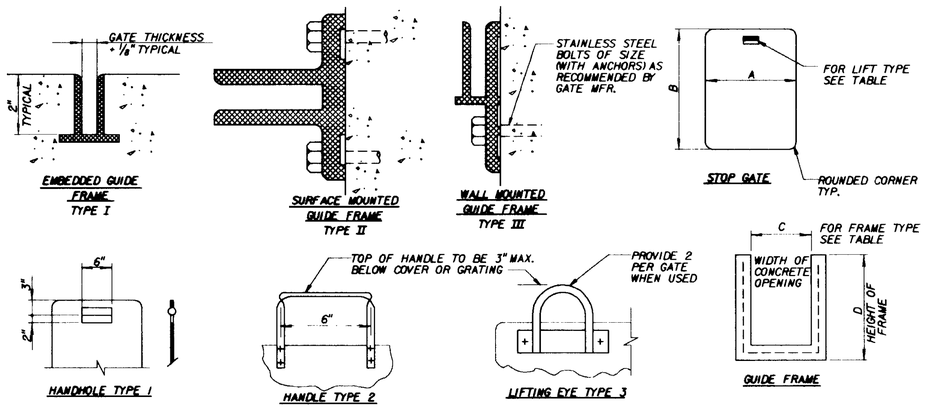

ALUMINUM STOP GATE DETAILS — S-302

REV 061588 JMM

	STOP GATE							GUIDE FRAME			
REF. SHEET NUMBER	GATE NO.	NO. REQ'D	THICKNESS	A	B	NO. OF HANDLES	TYPE OF HANDLES	NO. OF FRAMES	TYPE OF FRAMES	C	D

REV 061588

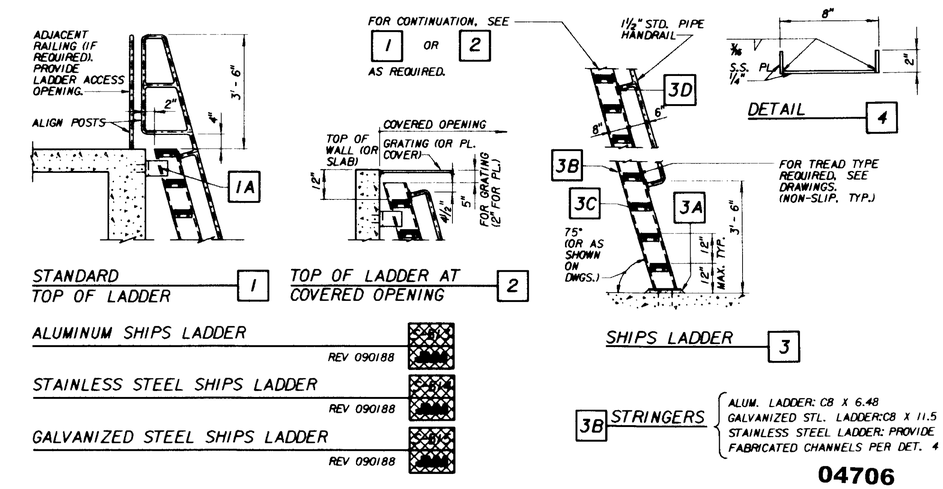

04706

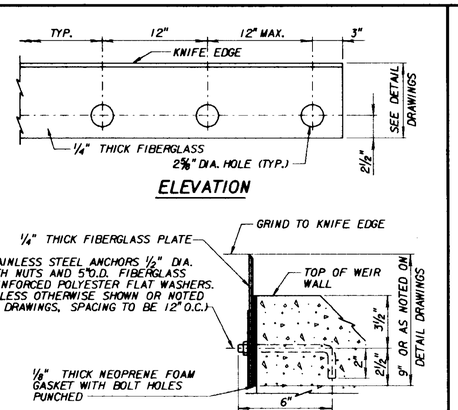

TYPICAL WEIR DETAIL — S-310

REV 061588 JMM

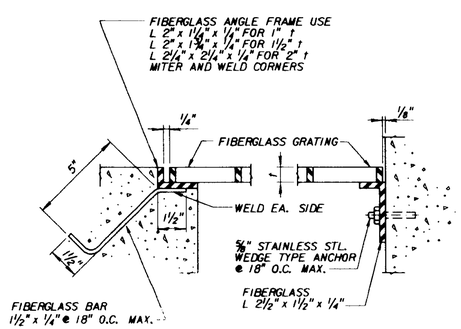

GRATING (SEE DRAWINGS)

1. 1" THICK - 1" x 4" RECTANGULAR MESH.
2. 1" " - 1 1/2" x 6" " "
3. 1 1/2" " - 1 1/2" x 6" " "
4. 1 1/2" " - 1 1/2" x 1 1/2" SQUARE MESH.
5. 2" " - 2" x 2" " "

NOTES:

1. ALL ENDS AND OPENINGS SHALL BE BANDED.
2. ALL EXTERIOR GRATINGS SHALL BE SECURED IN PLACE WITH REMOVABLE FASTENERS.
3. WELDING: USE EPOXY ADHESIVE BONDING AGENT.
4. WEIGHT OF GRATING SECTION SHALL NOT EXCEED 80 LBS.

PROJECT-RECORD DOCUMENT
C.W. Roen Const Co.
P.O. 4, Danville, CA 94526
DATE: 1-18-99 By: B.C.S.

FIBERGLASS GRATING DETAILS — S-320

REV 061588 JMM

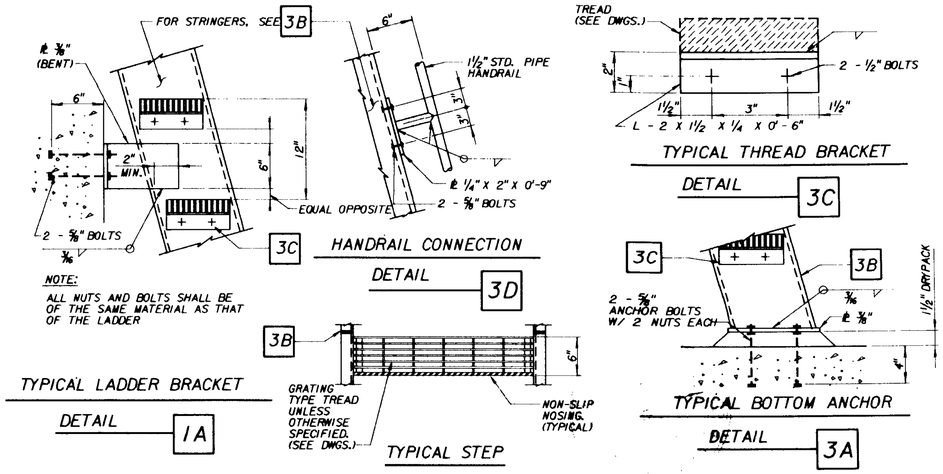

REV	DATE	BY	DESCRIPTION
RD	1-18-99		STOP GATE SCH.

SCALE:

WARNING: 0 1/2 1 — IF THIS BAR DOES NOT MEASURE 1" THEN DRAWING IS NOT TO SCALE.

DESIGNED / DRAWN / CHECKED

SUBMITTED: PROJECT ENGINEER — R. C. E. NO. 41019 — DATE 11/26/90

JAMES M. MONTGOMERY CONSULTING ENGINEERS, INC. — R. C. E. NO. — DATE 11/26/90

JMM James M. Montgomery Consulting Engineers, Inc. — Pasadena, California

APPROVED — DATE

APPROVED — DATE

LAS VIRGENES MWD / TRIUNFO CSD
TAPIA WRF - REGIONAL FACILITIES EXPANSION IV
FILTRATION / DISINFECTION ADDITION

STANDARD STOP GATES, WEIR PLATES AND SHIPS LADDER

SHEET GS-6 OF 190 SHEETS

JOB No. ___ FILE No. LVX STRL:VXGS6.DGN

PROJECT RECORD DOCUMENT
C.W. Roen Const Co.
P.O. 4 Danville CA 94526
DATE: 1-18-99 By: B.C.S.

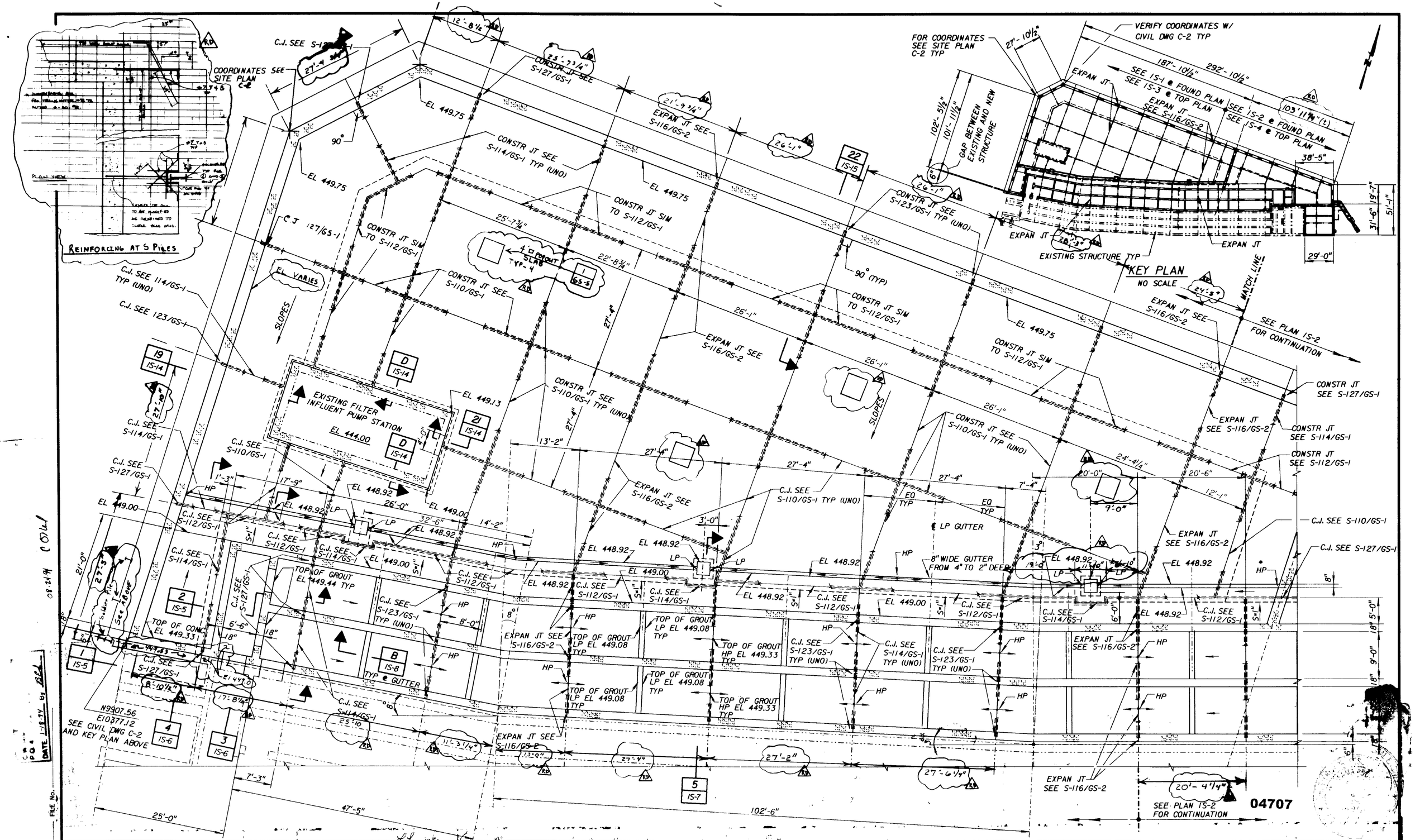

REV	DATE	BY	DESCRIPTION
RD	1-18-94		Footing Elevation S-W
RD	1-18-94		Soldier Piles at S-W Corner
RD	1-18-94		As-built Dimensions, Repaired Slabs

SCALE: 1/8" = 1'-0"

WARNING: THIS BAR DOES NOT MEASURE 1" THEN DRAWING IS NOT TO SCALE.

DESIGNED
DRAWN
CHECKED

SUBMITTED: Gerald M. Lucas — PROJECT ENGINEER — 41019 — R. C. E. NO. — 11/26/90 — DATE

JAMES M. MONTGOMERY CONSULTING ENGINEERS, INC. — 33699 — R. C. E. NO. — 11/26/90 — DATE

JMM James M. Montgomery Consulting Engineers, Inc.
Pasadena, California

APPROVED — DATE
APPROVED — DATE

LAS VIRGENES MWD / TRUNFO CSD
TAPIA WRF - REGIONAL FACILITIES EXPANSION IV
FILTRATION / DISINFECTION ADDITION

CHLORINE CONTACT TANK AND PONDS
FOUNDATION PLAN I

SHEET 2 OF 2 SHEETS — 1S-1

JOB No. — FILE No.

DATE 1-18-94 BY RD

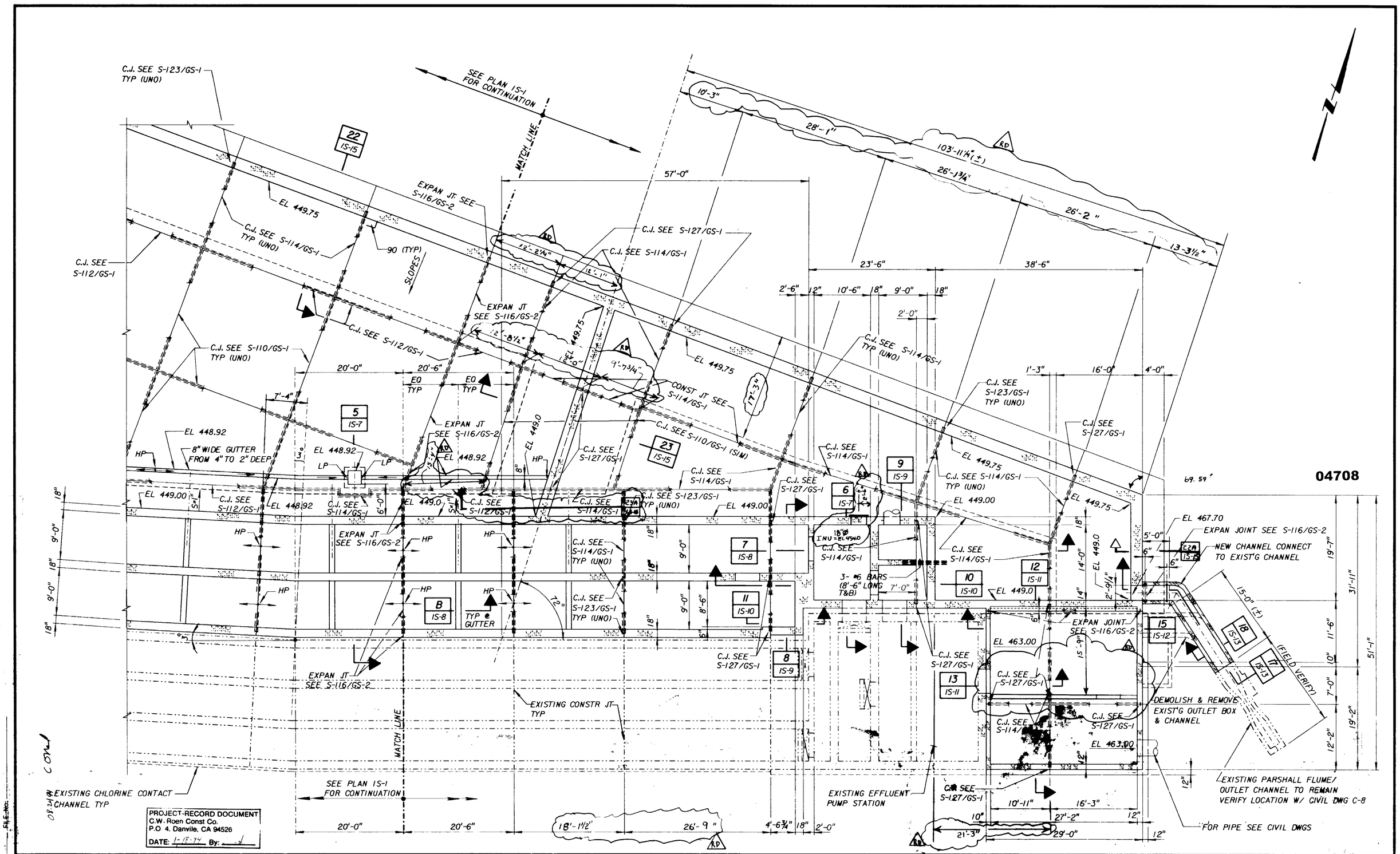

REV	DATE	BY	DESCRIPTION
RD	1-18-94	BES	As-built Dimensions

SCALE: 1/8"=1'-0"

WARNING: IF THIS BAR DOES NOT MEASURE 1" THEN DRAWING IS NOT TO SCALE.

DESIGNED / DRAWN / CHECKED

SUBMITTED: PROJECT ENGINEER — R. C. E. NO. 41817 — DATE 11/26/90

INTERIM ENGINEER — R. C. E. NO. 33699 — DATE 11/26/90

JMM James M. Montgomery Consulting Engineers, Inc. Pasadena, California

APPROVED — DATE

APPROVED — DATE

LAS VIRGENES MWD / TRIUNFO CSD
TAPIA WRF - REGIONAL FACILITIES EXPANSION IV
FILTRATION / DISINFECTION ADDITION

CHLORINE CONTACT TANK AND PONDS
FOUNDATION PLAN 2

SHEET IS-2 OF 110 SHEETS

JOB No. FILE No.

In Locations at tops of Walls where openings occur, there is inadequate reinforcing. At each opening provide #5 U bars @ 6" ctrs (8 each section). Bars to be as illustrated

NOTE :
SEE ARCH DWG 1A-1 FOR SCORING PATTERN @ DECK & DECK DRAIN DETAIL.

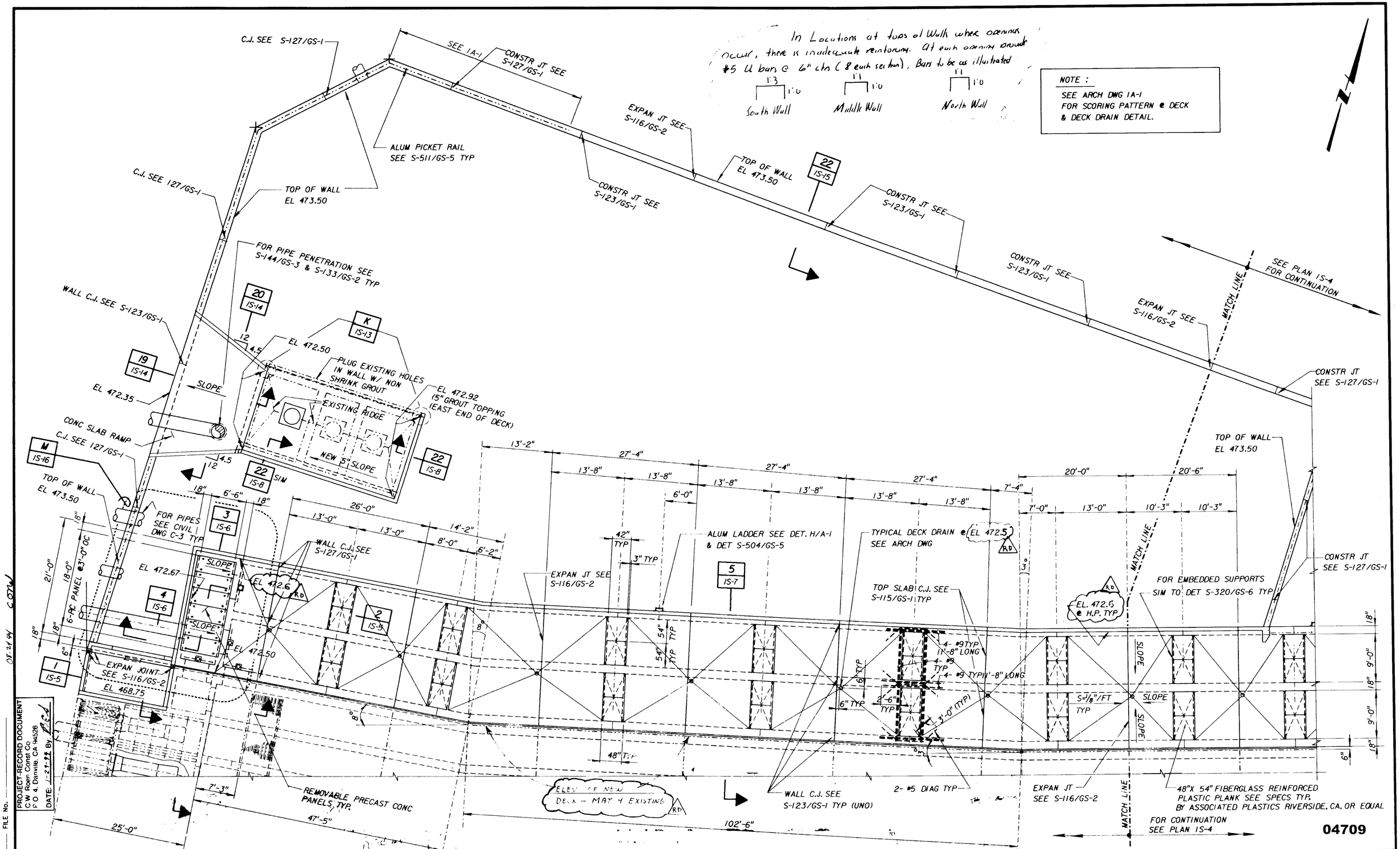

PROJECT-RECORD DOCUMENT
C W Roen Const Co
P O 4, Danville, CA 94526
DATE: 1-21-94 By: RCd

04709

REV	DATE	BY	DESCRIPTION
RD	1-21-94	RCd	Slab Elev & Rebar Note

SCALE: 1/4"=1'-0"

WARNING 0 1/2 1 — IF SHIP BAR DOES NOT MEASURE 1" THEN DRAWING IS NOT TO SCALE.

DESIGNED
DRAWN
CHECKED

SUBMITTED
PROJECT ENGINEER — 41019 R. C. E. NO. — 11/26/90 DATE
JAMES M. MONTGOMERY CONSULTING ENGINEERS, INC. — 33699 R. C. E. NO. — 11/20/90 DATE

JMM James M. Montgomery Consulting Engineers, Inc.
Pasadena, California

APPROVED — DATE
APPROVED — DATE

LAS VIRGENES MWD / TRIUNFO CSD
TAPIA WRF - REGIONAL FACILITIES EXPANSION IV
FILTRATION / DISINFECTION ADDITION
CHLORINE CONTACT TANK AND PONDS
TOP PLAN I

SHEET 1S-3 OF 110 SHEETS

JOB No. FILE No.

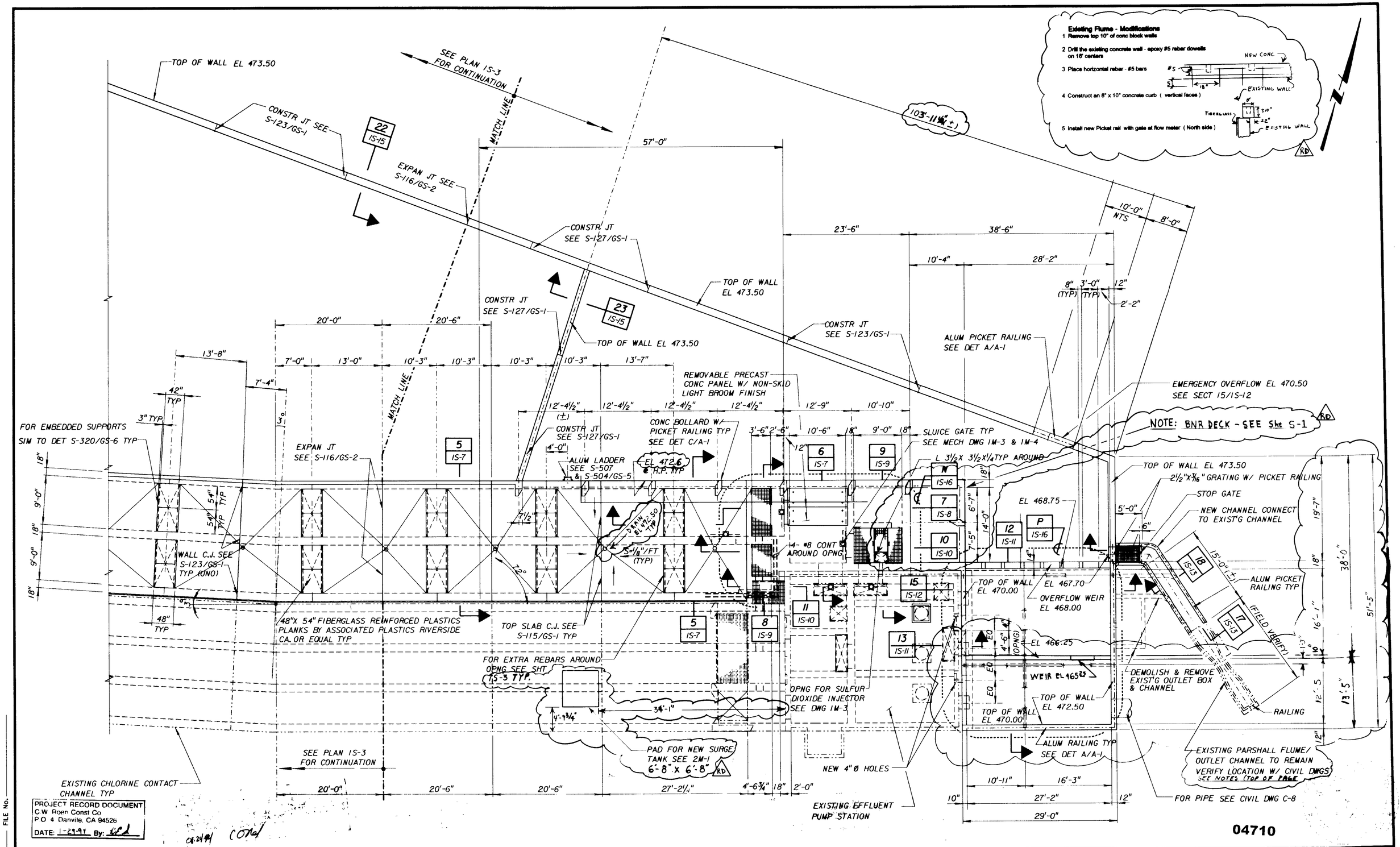

REV	DATE	BY	DESCRIPTION
RD	1-29-97	KCL	FLUME MOD
RD	1-29-97	KCL	Surge Tank Pad + BNR DECK + Dimensions

SCALE: 1/8"=1'-0"

WARNING: 0 ½ 1 — IF THIS BAR DOES NOT MEASURE 1" THEN DRAWING IS NOT TO SCALE.

DESIGNED / DRAWN / CHECKED

SUBMITTED: Jorge M. Pacas — PROJECT ENGINEER — R. C. E. NO. 41019 — DATE 11/26/96

James M. Montgomery, Consulting Engineers, Inc. — R. C. E. NO. 33099 — DATE 11/26/96

JMM James M. Montgomery Consulting Engineers, Inc. — Pasadena, California

APPROVED — DATE

APPROVED — DATE

LAS VIRGENES MWD / TRIUNFO CSD
TAPIA WRF - REGIONAL FACILITIES EXPANSION IV
FILTRATION / DISINFECTION ADDITION

CHLORINE CONTACT TANK AND PONDS
TOP PLAN 2

SHEET 1S-4 OF 110 SHEETS

JOB No. FILE No.

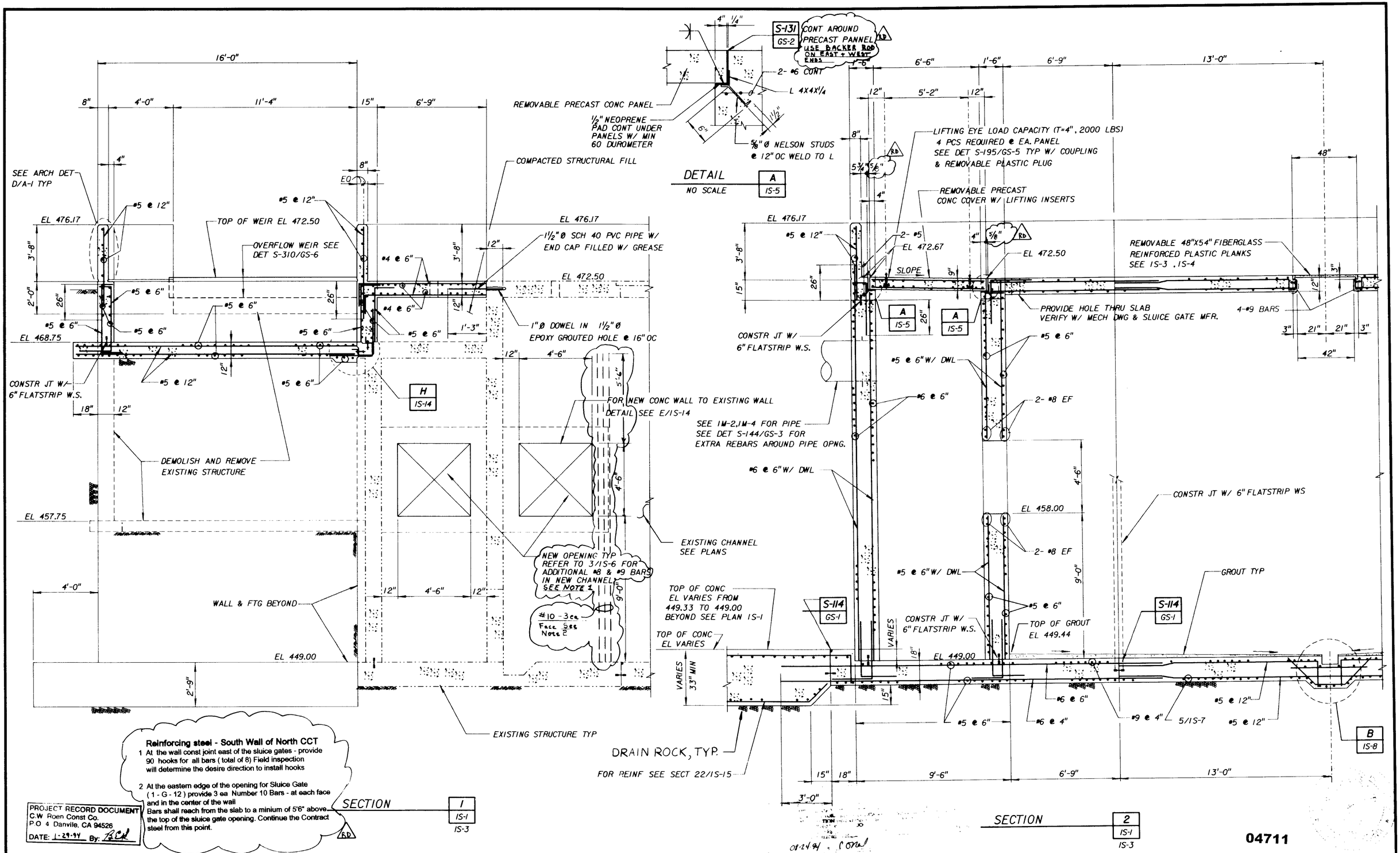

PROJECT RECORD DOCUMENT
C.W Roen Const Co.
P.O 4 Danville, CA 94526
DATE: 1-29-99 By:

REV	DATE	BY	DESCRIPTION
RD	1-29-99		REMOVABLE PANEL - SEALANT
RD	1-29-99		Rebar at Sluice Gate OPENINGS

SCALE: ⅜"=1'-0"

WARNING: IF THIS BAR DOES NOT MEASURE 1" THEN DRAWING IS NOT TO SCALE.

DESIGNED
DRAWN
CHECKED

SUBMITTED
PROJECT ENGINEER — R. C. E. NO. 41019 — DATE 11/26/90
JAMES M. MONTGOMERY CONSULTING ENGINEERS, INC. — R. C. E. NO. — DATE 11/26/90

James M. Montgomery Consulting Engineers, Inc.
Pasadena, California

APPROVED — DATE
APPROVED — DATE

LAS VIRGENES MWD / TRIUNFO CSD
TAPIA WRF - REGIONAL FACILITIES EXPANSION IV
FILTRATION / DISINFECTION ADDITION
CHLORINE CONTACT TANK
INLET STRUCTURE - SECTIONS 1

SHEET IS-5 OF 110 SHEETS

JOB NO. FILE NO.

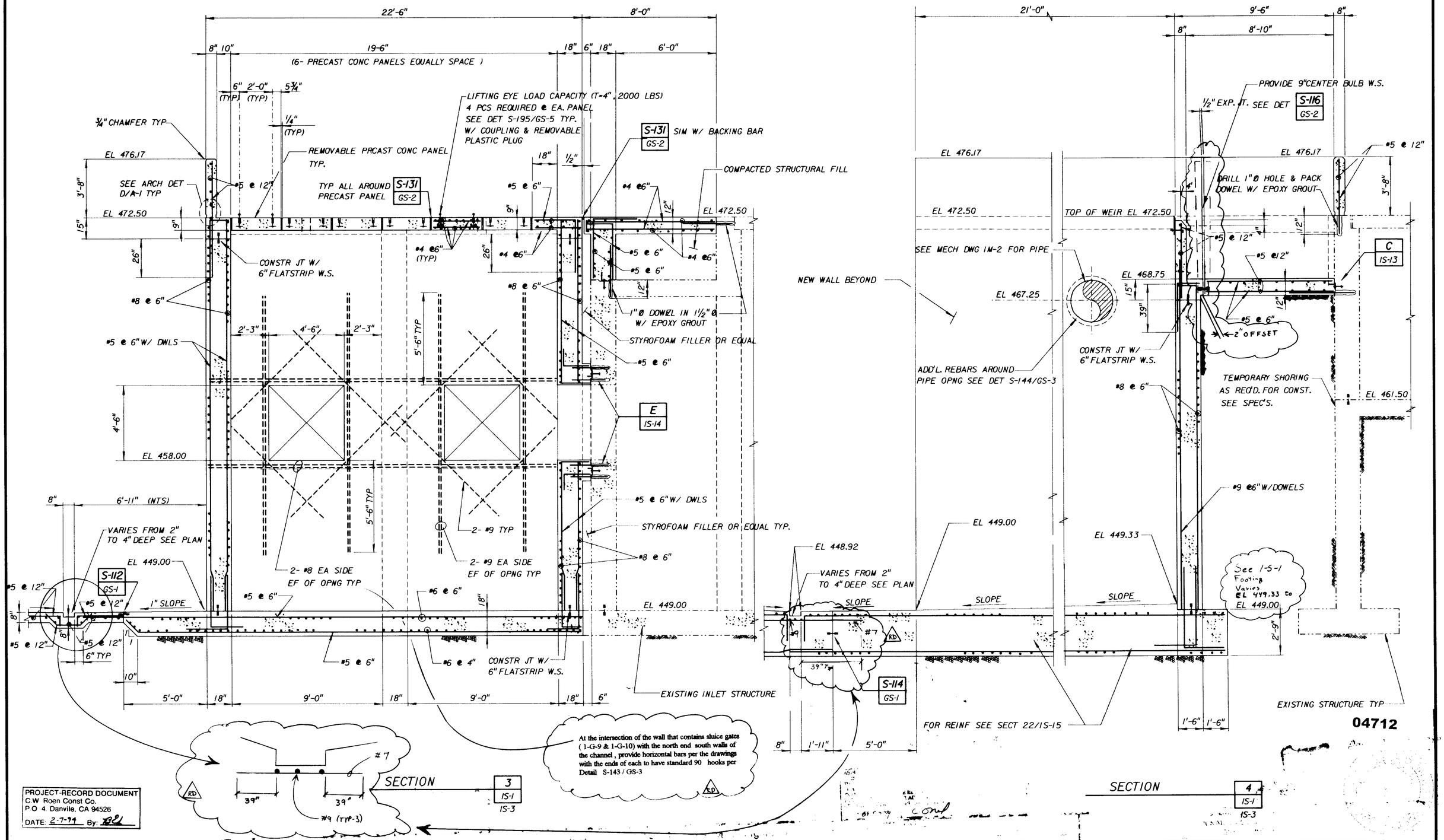

PROJECT-RECORD DOCUMENT
C.W. Roen Const Co.
P.O. 4. Danville, CA 94526
DATE: 2-7-99 By:

REV	DATE	BY	DESCRIPTION
RD	2-7-99		S Gate — WALL Rebar
RD	2-7-99		Overflow CJ / Drain Rebar

SCALE: ⅜"=1'-0"

WARNING: 0 ½ 1 — IF THIS BAR DOES NOT MEASURE 1" THEN DRAWING IS NOT TO SCALE.

DESIGNED
DRAWN
CHECKED

SUBMITTED: Jack M. Pacer — PROJECT ENGINEER — 41019 R. C. E. NO. — 11/26/90 DATE

JAMES M. MONTGOMERY CONSULTING ENGINEERS, INC. — 32679 R. C. E. NO. — 11/26/90 DATE

JMM James M. Montgomery Consulting Engineers, Inc. — Pasadena, California

APPROVED — DATE

APPROVED — DATE

LAS VIRGENES MWD / TRUNFO CSD
TAPIA WRF - REGIONAL FACILITIES EXPANSION IV
FILTRATION / DISINFECTION ADDITION

CHLORINE CONTACT TANK
INLET STRUCTURE - SECTIONS 2

SHEET IS-6 OF 110 SHEETS

FILE No.

JOB No.

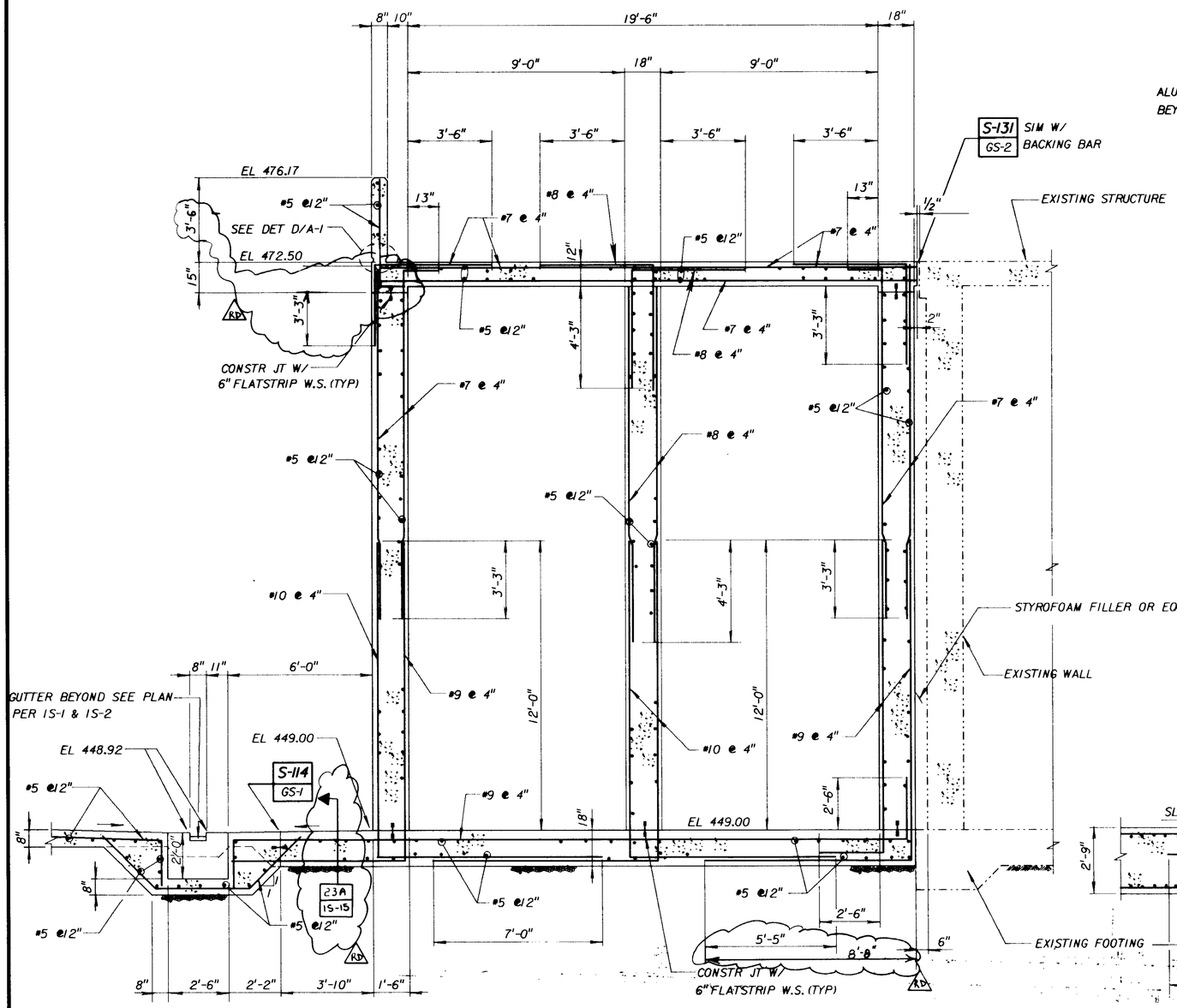

SECTION 5 / IS-1 (IS-2, IS-3, IS-4)

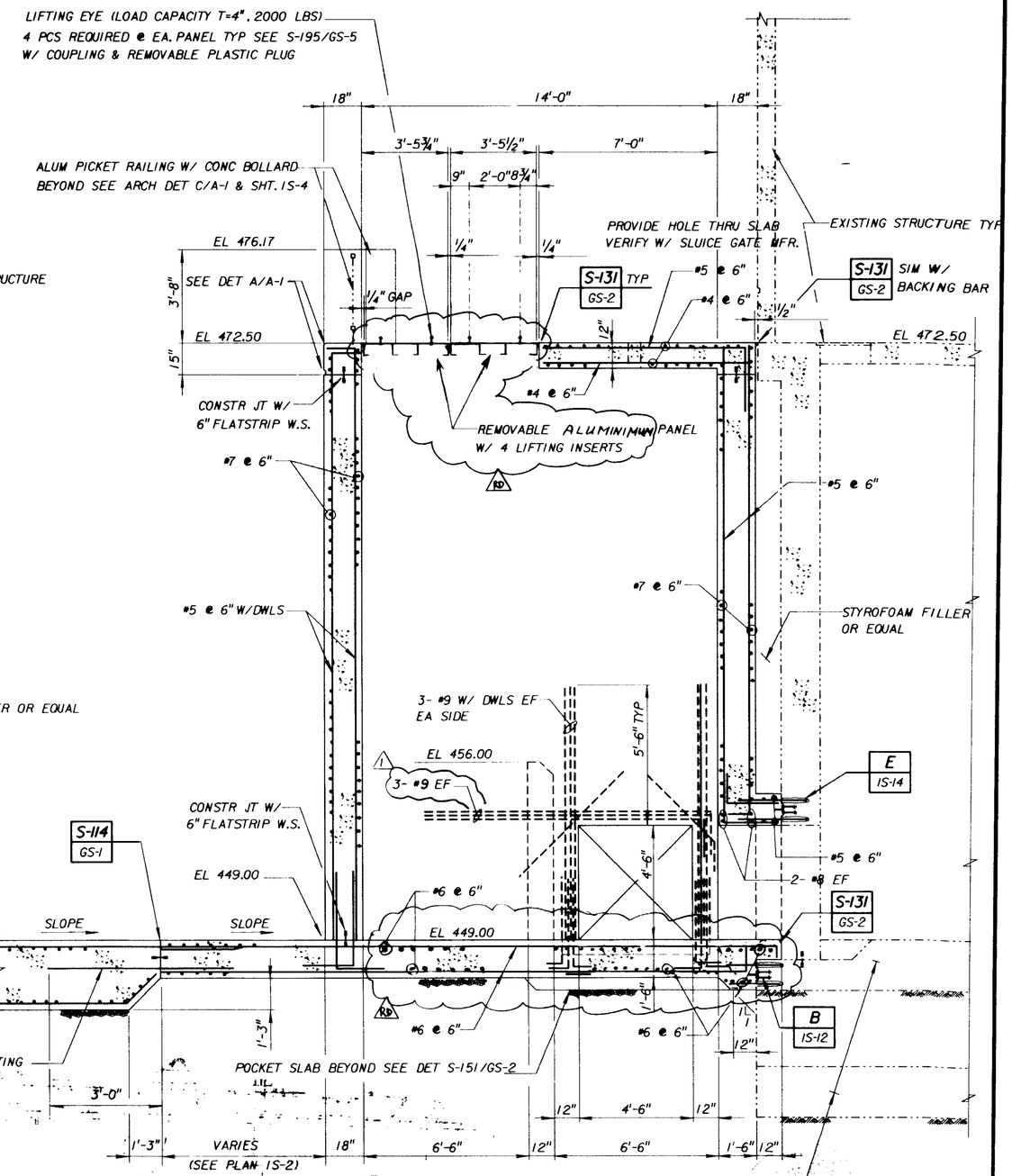

SECTION 6 / IS-2 (IS-4)

04713

PROJECT RECORD DOCUMENT
C.W. Roen Const Co.
P.O. 4, Danville, CA 94526
DATE: 2-8-94 By: RCL

REV	DATE	BY	DESCRIPTION
RD	2-8-94	RCL	Rebar Details, Removable Panels
1	4-24-94	M.B.J.	AS BID

SCALE: 3/8"=1'-0"

WARNING: 0 1/2 1 — IF THIS BAR DOES NOT MEASURE 1/2" THEN DRAWING IS NOT TO SCALE

DESIGNED
DRAWN
CHECKED

SUBMITTED
PROJECT ENGINEER — R. C. E. NO. 41619 — DATE 11/26/90
JAMES M. MONTGOMERY CONSULTING ENGINEERS, INC. — R. C. E. NO. 33699 — DATE 11/26/90

JMM James M. Montgomery Consulting Engineers, Inc.
Pasadena, California

APPROVED — DATE
APPROVED — DATE

LAS VIRGENES MWD / TRIUNFO CSD
TAPIA WRF - REGIONAL FACILITIES EXPANSION IV
FILTRATION / DISINFECTION ADDITION
CHLORINE CONTACT TANK
EFFLUENT STRUCTURE - SECTIONS I

SHEET IS-7 OF 110 SHEETS

FILE No.
JOB No.

THE "L" BARS FROM THE WALLS TO THE DECK SHALL BE THE SAME SIZE & SPACING AS THE VERTICAL BARS IN THE WALLS. SEE DET. S-139/GS-3 FOR SPLICE LENGTH.

23'-6"

12" | 10'-6" | 1'-6" | 9'-0" | 1'-6"

12" | 9'-0" | 12"

SIM 5 / IS-7

ALUM. PICKET RAILING SEE ARCH DET. A/A-1 TYP

FOR ADD'L. REBARS SEE PLANS IS-3 & IS-4

CONC. BOLLARD TYP

FOR ADD'L. REBARS SEE PLANS IS-3 & IS-4

LIFTING EYE LOAD CAPACITY (T=4", 2000 LBS) 4 PCS REQ'D. @ EA. PANEL SEE DET. S-195/GS-5 W/ COUPLING & REMOVABLE PLASTIC PLUG

4" TYP

TOP OF BOLLARD EL 476.17 TYP

EL 472.50

15"

12"

42"

#7 @ 4" TYP

#5 @ 12" TYP

2½" x 3/16" ALUM GRATING

3'-6" | 2'-6"

48"X54" FIBERGLASS REINF. PLASTIC PLATE BY ASSOCIATED PLASTICS RIVERSIDE, CA OR EQUAL

A-A

A / IS-5

#5 @ 6"

#4 @ 6"

#6 @ 6"

#6 @ 6"

#5 @ 6"

#6 @ 6"W/ DWLS

#6 @ 6"W/ DWLS

CONST. JOINT W/ 6" FLATSTRI W.S.(TYP)

2- #7 EF EA SIDE

SEE MECH DWG 1M-4 FOR PIPE FOR ADD'L. REBARS SEE S-144/GS-3

INV EL 449.50

3/8" Chk Plate ALUM

¼ ▷ 3@12

TS 3"x3"x1/4" (TYP-4) (ALUM.)

3" | 10" | 10" | 3"

3' 5½"

SECTION A-A

ALUM PLANK TYP-2

RD

S114 / GS-1

#7 @ 4"

#6 @ 6"X 6'-0"

#6 @ 6"

EL 449.00

18"

#6 @ 6"

#6 @ 6"

#7 or #10 per 5/IS-7

7'- 0¾" | 12" | 10'-6" | 18" | 9'-0" | 18" | 21'-3" | 15" | 2'-6" | 3'-0"

S-114 / GS-1

#6@6"

#7 @ 6"

#7@4"

#7@4"

SEE 22A / IS-15

S-114 / GS-1

#6 @ 6" DOWELS

21'-9"

SEE SECT 5/IS-7 FOR REINF

FLR. SLAB POCKET FOR SLUICE SEE DET S-151/GS-2

SECTION 7 / IS-2 / IS-4

SEE SECT 22 /IS-15 FOR REINF S/M

FOR SLAB REINF SEE SECT 2/IS-5

TOP OF GROUT @ LP EL 449.08

12"

2- #9

1X4 GROUT KEY TYP

SLOPE | SLOPE

TOP OF SLAB EL 449.00

6" | 18" | 6"

#5 @ 12" ADD'L BENT BARS

#5 @ 12" ADD'L BARS 5'-0" LONG

2'-0"

2-#9

DETAIL B / IS-1 IS-2, IS-5

SCALE : ¾"=1'-0"

NOTE :
USE SIKATOP 122 OR EQUAL
ADD ⅜" PEA GRAVEL WHEN DEPTH OF TOPPING EXCEEDS 1"
PREPARE SURFACE IN ACCORDANCE W/ MFR RECOMMENDATION.
FOR USE ONLY ON EXTERIOR SLAB NOT IN CONTACT W/ WATER.

1'-4"

#5 @ 12"

5" TOPPING (MAX) @ EAST END OF DECK, TAPER TO DRAIN TO 472.50 @ WEST END OF DECK SEE NOTE

3'-8"

SEE ARCH DWGS FOR DETAIL

9"

EXISTING PUMP STATION ROOF

DRILL 1" Ø HOLE & PACK W/ EXPOXY GROUT

EXISTING PUMP STATION WALL WHERE OCCURS

SECTION 22 / IS-3

SCALE : ¾"=1'-0"

PROJECT RECORD DOCUMENT
C.W. Roen Const Co.
P.O. 4, Danville, CA 94526
DATE: 2-8-94 By: [illegible]

08-2-94 CONed

04714

REV	DATE	BY	DESCRIPTION
RD	2-8-94	BL	Rebar As-built, Alum Plank
1	12-1-93		AS BIL

SCALE: ⅜"=1'-0"

WARNING 0 ½ 1 — IF THIS BAR DOES NOT MEASURE 1" THEN DRAWING IS NOT TO SCALE.

DESIGNED / DRAWN / CHECKED

SUBMITTED — PROJECT ENGINEER — R. C. E. NO. 19 — DATE 11/26/90

JAMES M. MONTGOMERY CONSULTING ENGINEERS, INC. — R. C. E. NO. 33699 — DATE 11/26/90

JMM James M. Montgomery Consulting Engineers, Inc. — Pasadena, California

APPROVED — DATE

APPROVED — DATE

LAS VIRGENES MWD / TRIUNFO CSD
TAPIA WRF - REGIONAL FACILITIES EXPANSION IV
FILTRATION & DISINFECTION ADDITION

CHLORINE CONTACT TANK
EFFLUENT STRUCTURE - SECTIONS 2

SHEET IS-8 OF 11 SHEETS

JOB NO. • FILE No.

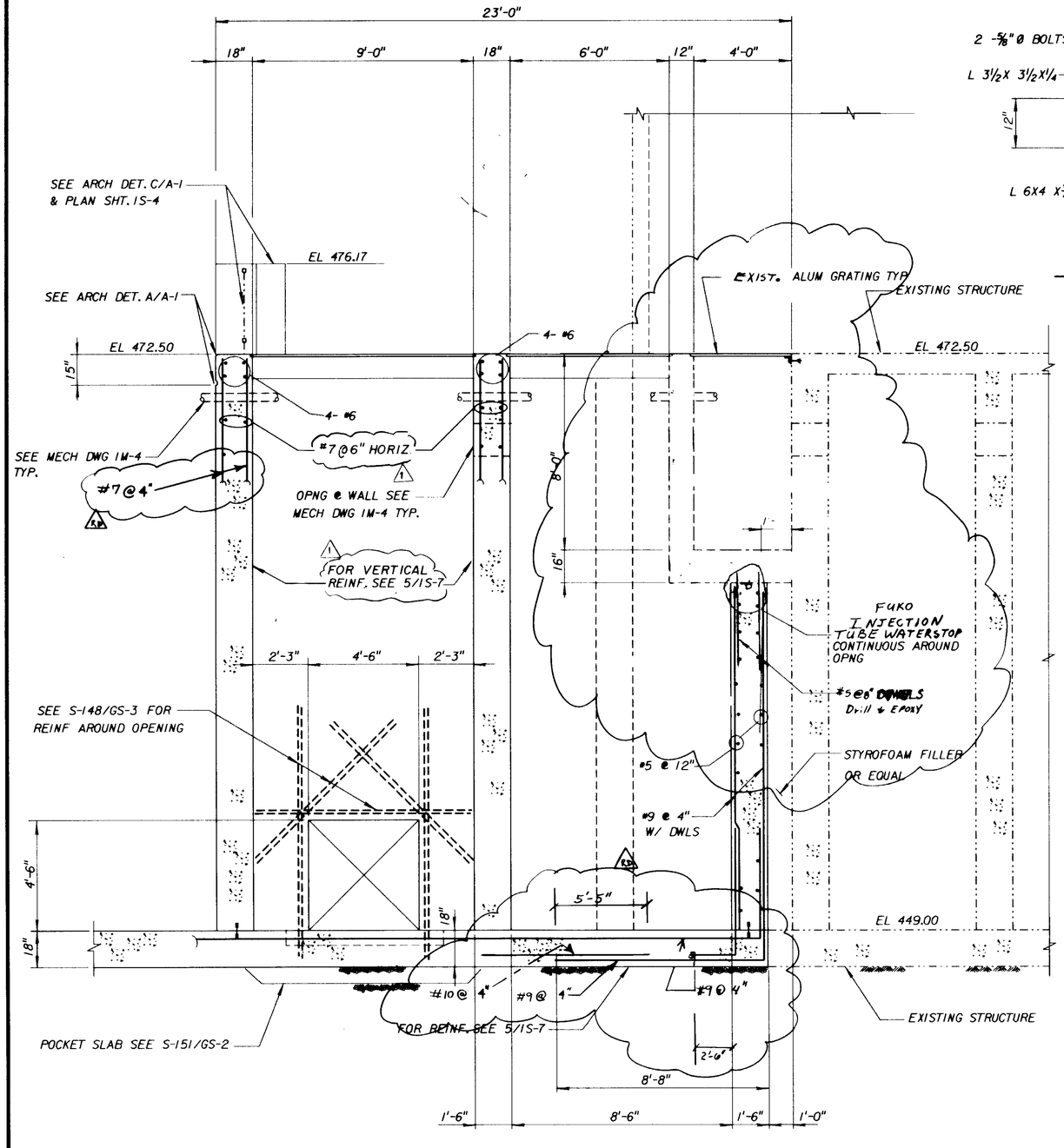

SECTION 8 / 1S-2 / 1S-4

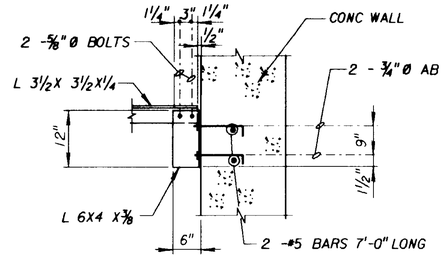

DETAIL C / —
NO SCALE

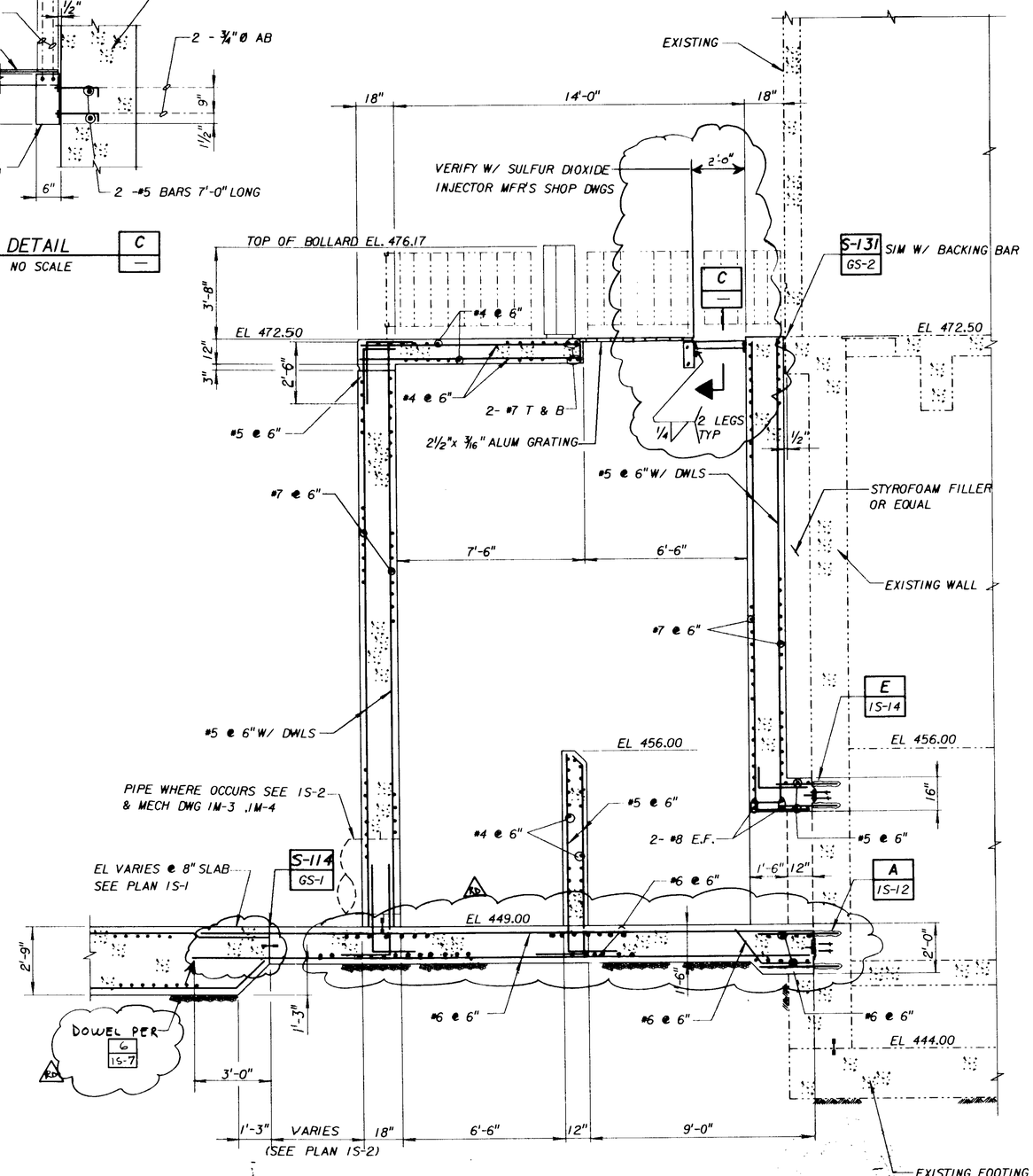

SECTION 9 / 1S-2 / 1S-4

PROJECT-RECORD DOCUMENT
C.W. Roen Const Co.
P.O. 4, Danville, CA 94526
DATE: 1-8-94 By: [illegible]

08-24-94 CONed

04715

REV	DATE	BY	DESCRIPTION
RD	1-8-94	[illegible]	As-Built - Rebar, SO_2 Injector
1	4-24-91	MRJ	AS BID

SCALE: 3/8"=1'-0"

WARNING: 0 ½ 1 — IF THIS BAR DOES NOT MEASURE 1" THEN DRAWING IS NOT TO SCALE.

DESIGNED [illegible]
DRAWN [illegible]
CHECKED [illegible]

SUBMITTED [illegible] — PROJECT ENGINEER — R. C. E. NO. 41019 — DATE 11/26/90
[illegible] — JAMES M. MONTGOMERY CONSULTING ENGINEERS, INC. — R. C. E. NO. 33199 — DATE 11/26/90

James M. Montgomery Consulting Engineers, Inc.
Pasadena, California

APPROVED — DATE
APPROVED — DATE

LAS VIRGENES MWD / TRIUNFO CSD
TAPIA WRF - REGIONAL FACILITIES EXPANSION IV
FILTRATION / DISINFECTION ADDITION

CHLORINE CONTACT TANK
EFFLUENT STRUCTURE - SECTIONS 3

SHEET IS-9 OF 110 SHEETS

JOB No. • FILE No.

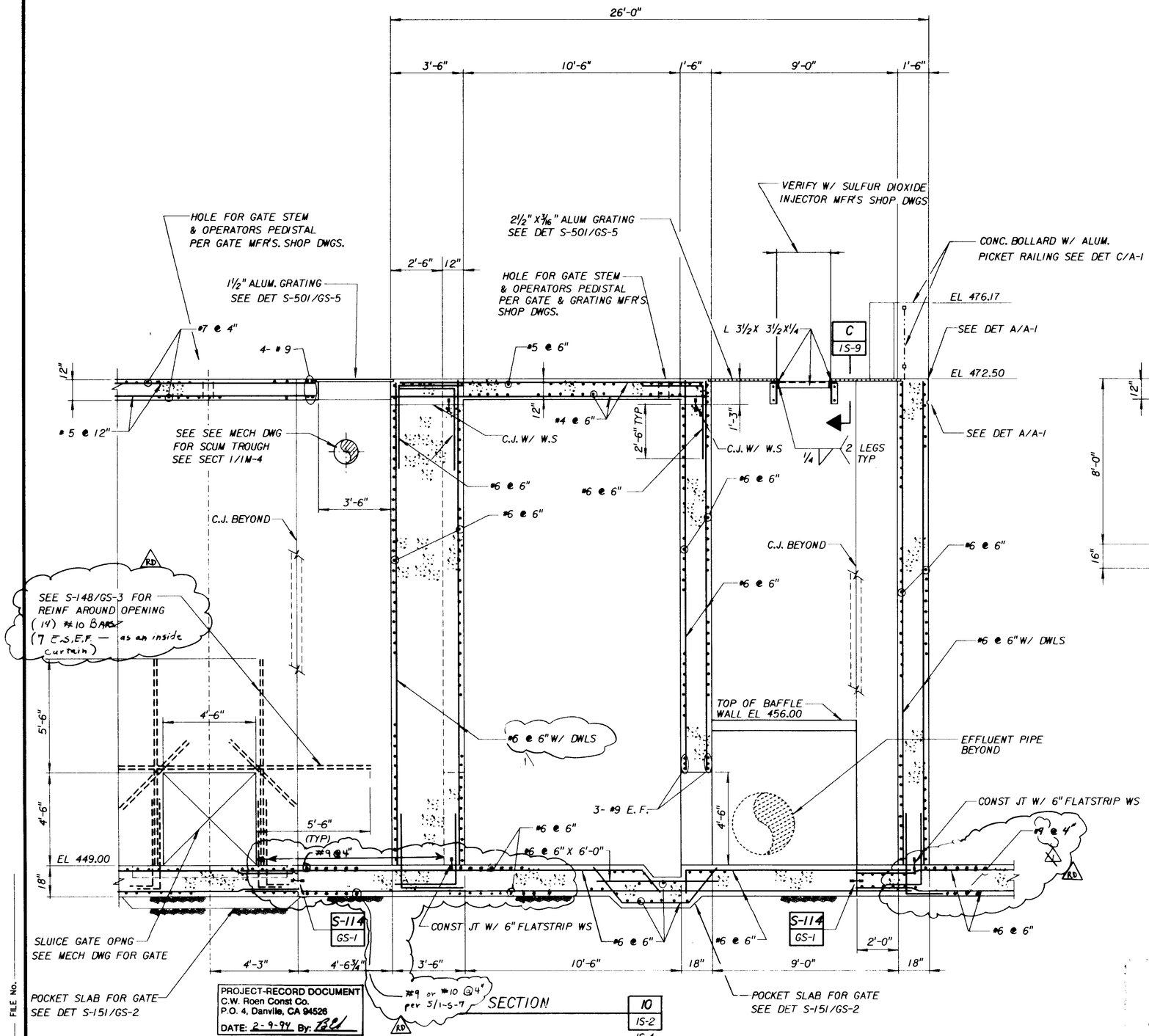

PROJECT-RECORD DOCUMENT
C.W. Roen Const Co.
P.O. 4, Danville, CA 94526
DATE: 2-9-94 By: [illegible]

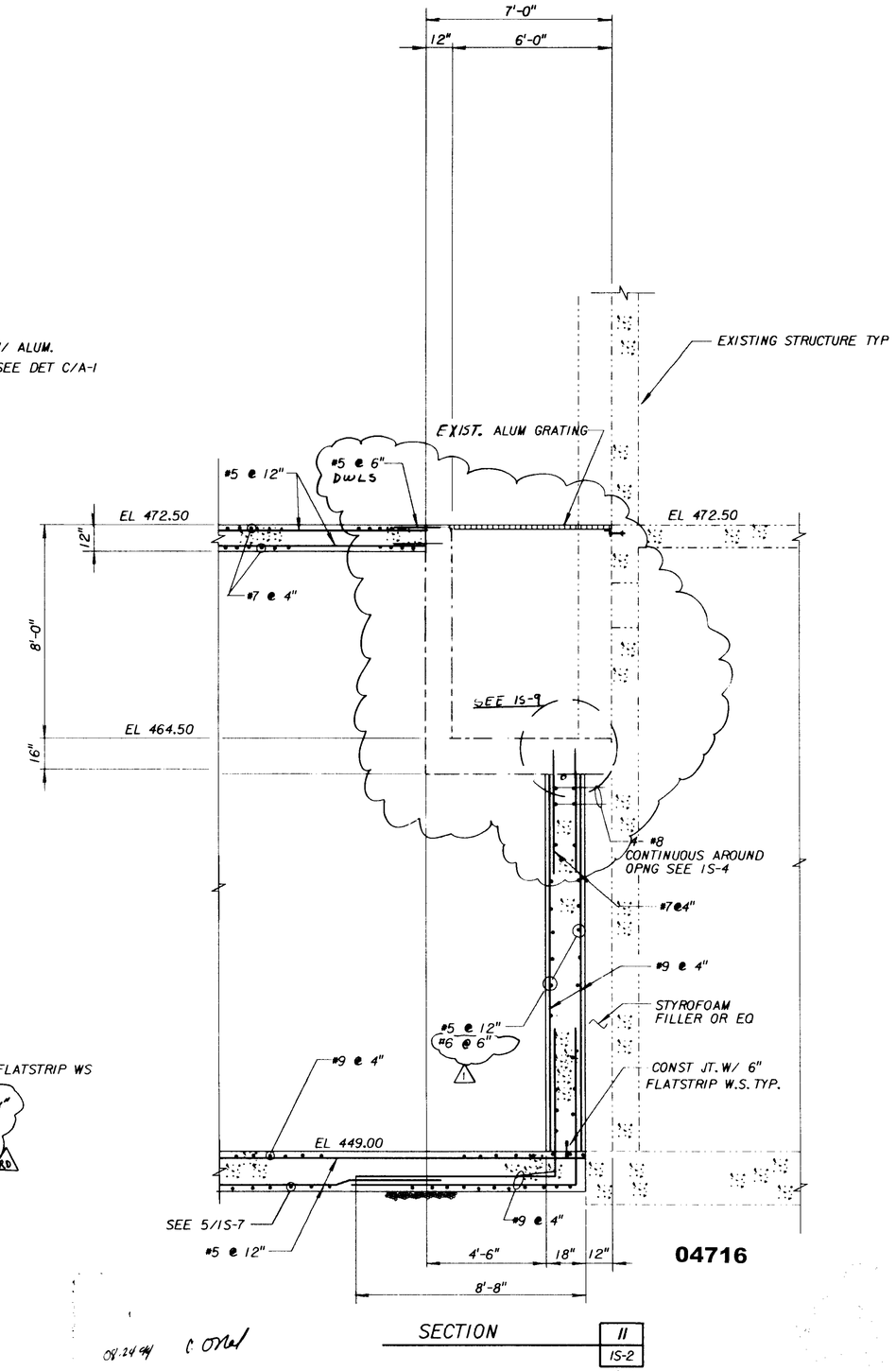

04716

08.24.94 C. Orel

REV	DATE	BY	DESCRIPTION
RD	2-9-94	BPL	As-built - Rebar / Ex. SUMP
1	8.24.94	M.B.	AS BID

SCALE: 3/8"=1'-0"

WARNING: 0 ½ 1 — IF THIS BAR DOES NOT MEASURE 1" THEN DRAWING IS NOT TO SCALE.

DESIGNED [illegible] 11/26/90
DRAWN [illegible]
CHECKED [illegible]
PROJECT ENGINEER [illegible] 41019 R. C. E. NO. 11/26/90 DATE
JAMES M. MONTGOMERY CONSULTING ENGINEERS, INC. [illegible] 33699 R. C. E. NO. 11/26/90 DATE

JMM James M. Montgomery Consulting Engineers, Inc.
Pasadena, California

APPROVED [illegible] DATE
APPROVED DATE

LAS VIRGENES MWD / TRIUNFO CSD
TAPIA WRF - REGIONAL FACILITIES EXPANSION IV
FILTRATION / DISINFECTION ADDITION

CHLORINE CONTACT TANK
EFFLUENT STRUCTURE - SECTIONS 4

SHEET IS-10 OF 100 SHEETS

FILE No.
JOB No.

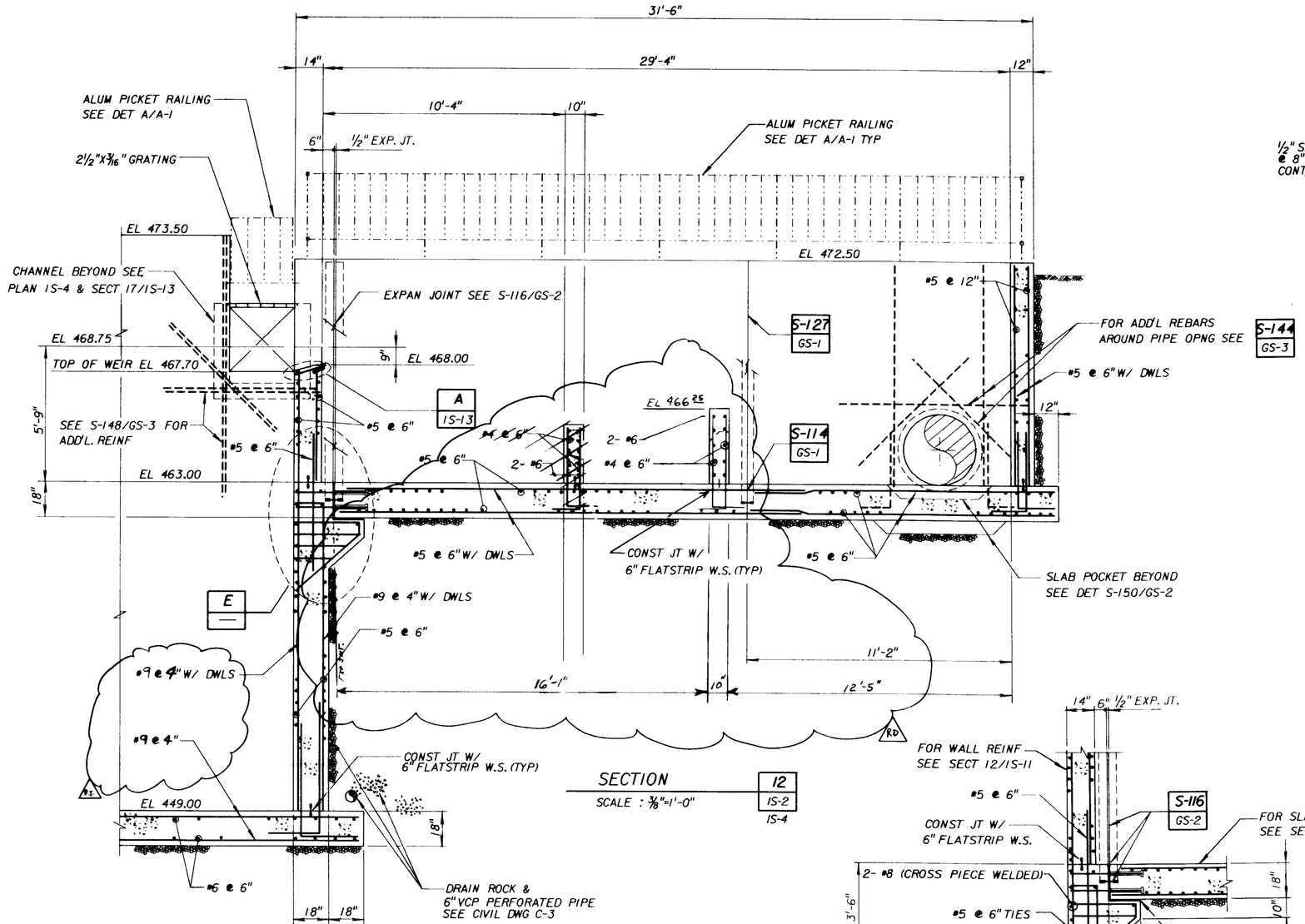

SECTION 12 / 1S-2 / 1S-4
SCALE : 3/8"=1'-0"

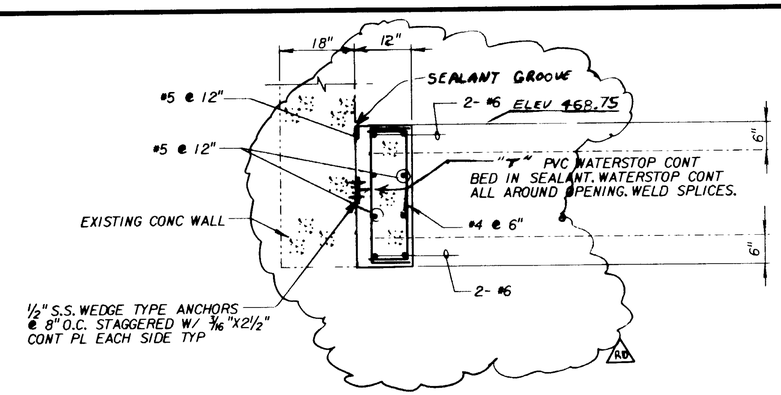

DETAIL D
SCALE : 3/4"=1'-0"

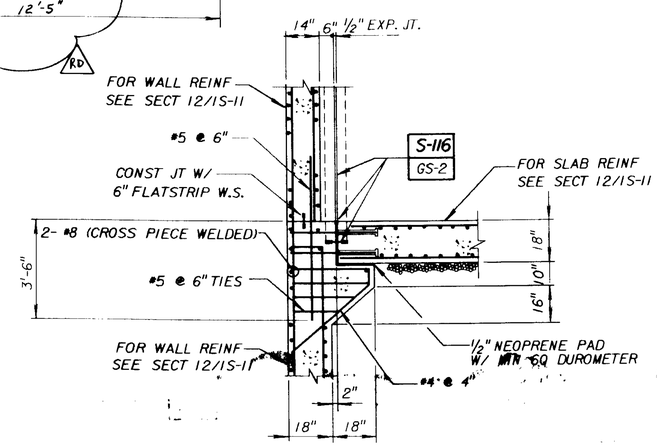

DETAIL E
SCALE : 3/8"=1'-0"

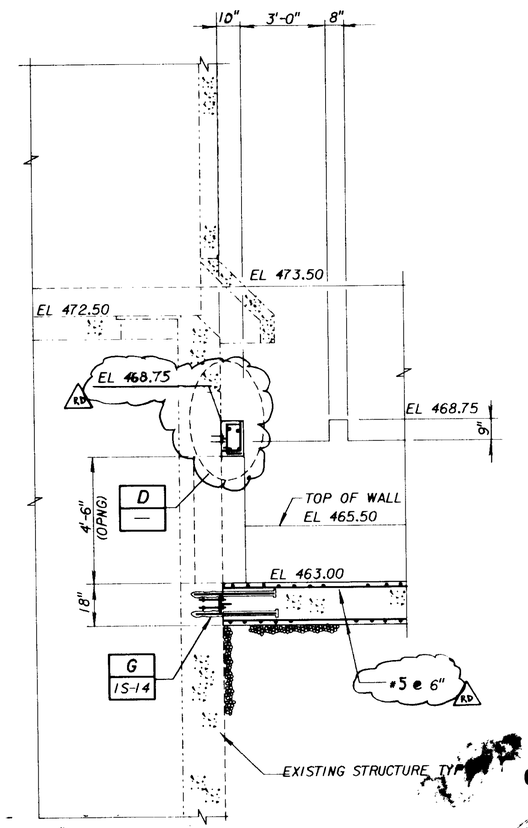

SECTION 13 / 1S-2 / 1S-4
SCALE : 3/8"=1'-0"

04717

PROJECT RECORD DOCUMENT
C.W Roen Const Co
P.O 4 Danville CA 94526
DATE 2-9-94 By. BCL

REV	DATE	BY	DESCRIPTION
RD	2-9-94	BCL	As-built - Rebar

SCALE: AS NOTED

WARNING 0 - 1/2 - 1 IF THIS BAR DOES NOT MEASURE 1" THEN DRAWING IS NOT TO SCALE.

DESIGNED
DRAWN
CHECKED

SUBMITTED
PROJECT ENGINEER — R. C. E. NO. 41819 — DATE 11/26/90
JAMES M. MONTGOMERY CONSULTING ENGINEERS, INC. — R. C. E. NO. 36799 — DATE 11/26/90

JMM James M. Montgomery Consulting Engineers, Inc.
Pasadena, California

APPROVED — DATE
APPROVED — DATE

LAS VIRGENES MWD / TRIUNFO CSD
TAPIA WRF - REGIONAL FACILITIES EXPANSION IV
FILTRATION / DISINFECTION ADDITION
POND OVERFLOW
SECTION I

SHEET IS-11 OF 130 SHEETS

JOB NO. FILE NO.

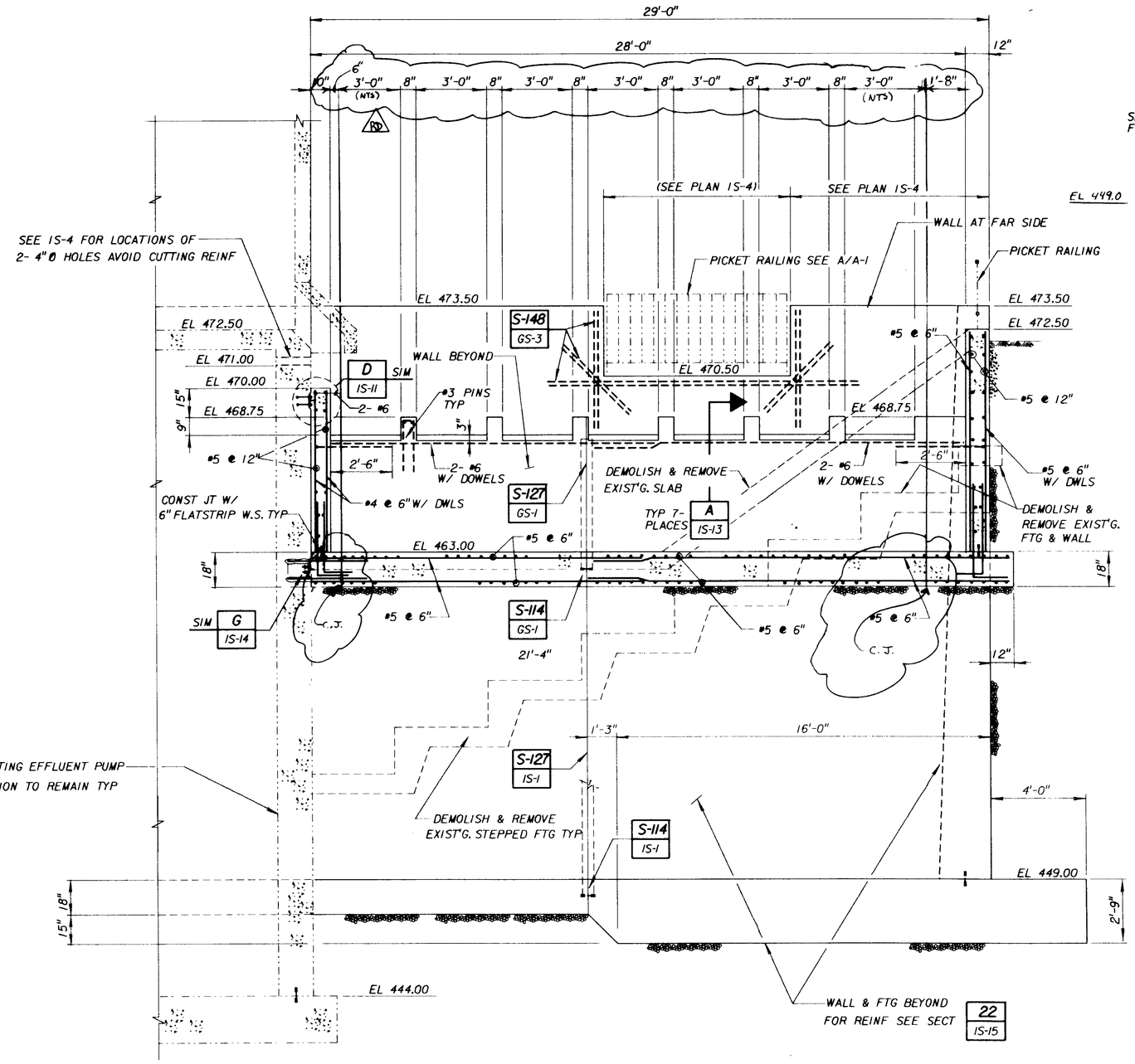

SECTION 15 / IS-2 / IS-4

SCALE : 3/8"=1'-0"

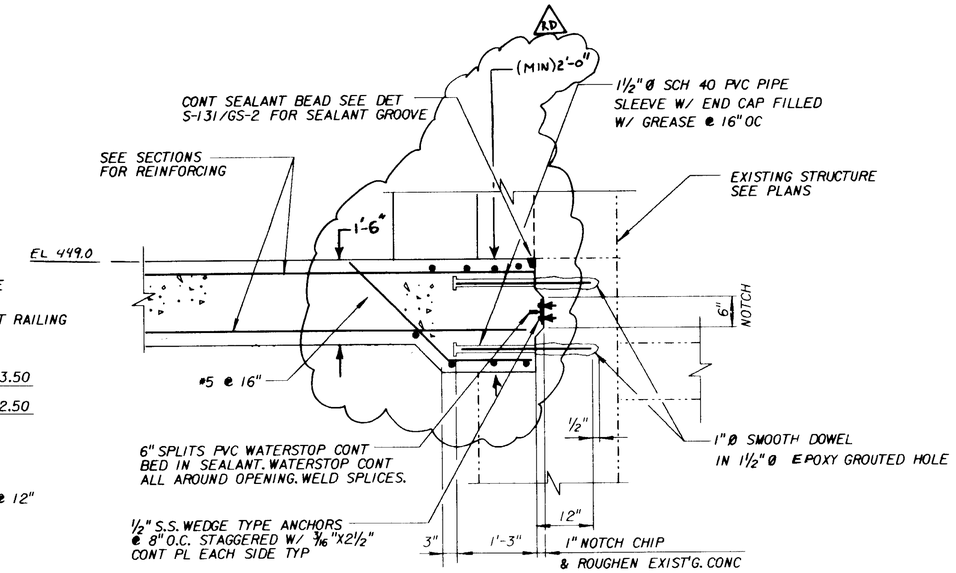

DETAIL A / 9/IS-9

SCALE : 3/4"=1'-0"

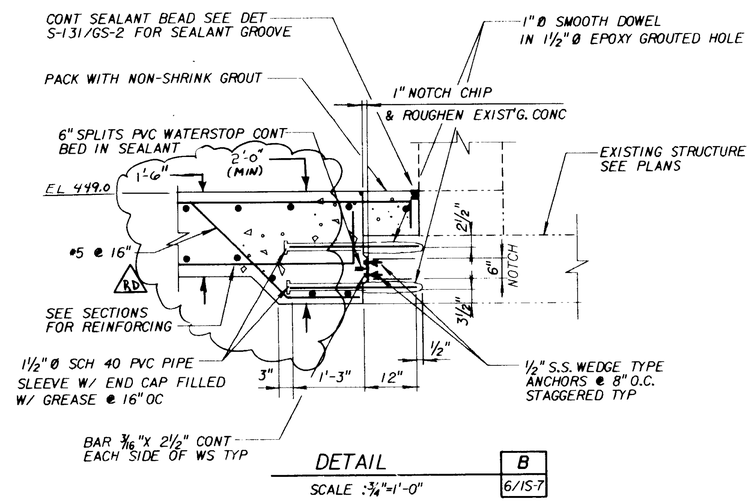

DETAIL B / 6/IS-7

SCALE : 3/4"=1'-0"

PROJECT RECORD DOCUMENT
C.W Roen Const Co.
P.O 4. Danville, CA 94526
DATE: 2-9-94 By: RCL

08.24.94 C. O'Neal

04718

REV	DATE	BY	DESCRIPTION
RD	2-10-94	RCL	AS-BUILT ADD CJ / SHIFT DISPL

SCALE: AS NOTED

WARNING: IF THIS BAR DOES NOT MEASURE 1" THEN DRAWING IS NOT TO SCALE.

DESIGNED / DRAWN / CHECKED

SUBMITTED: PROJECT ENGINEER — R. C. E. NO. 41019 DATE 11/26/90
JAMES M. MONTGOMERY CONSULTING ENGINEERS, INC. — R. C. E. NO. 33699 DATE 11/26/90

JMM James M. Montgomery Consulting Engineers, Inc.
Pasadena, California

APPROVED — DATE
APPROVED — DATE

LAS VIRGENES MWD / TRIUNFO CSD
TAPIA WRF - REGIONAL FACILITIES EXPANSION IV
FILTRATION / DISINFECTION ADDITION
EFFLUENT POND OVERFLOW
SECTION 2

SHEET IS-12 OF 110 SHEETS

JOB NO. FILE NO.

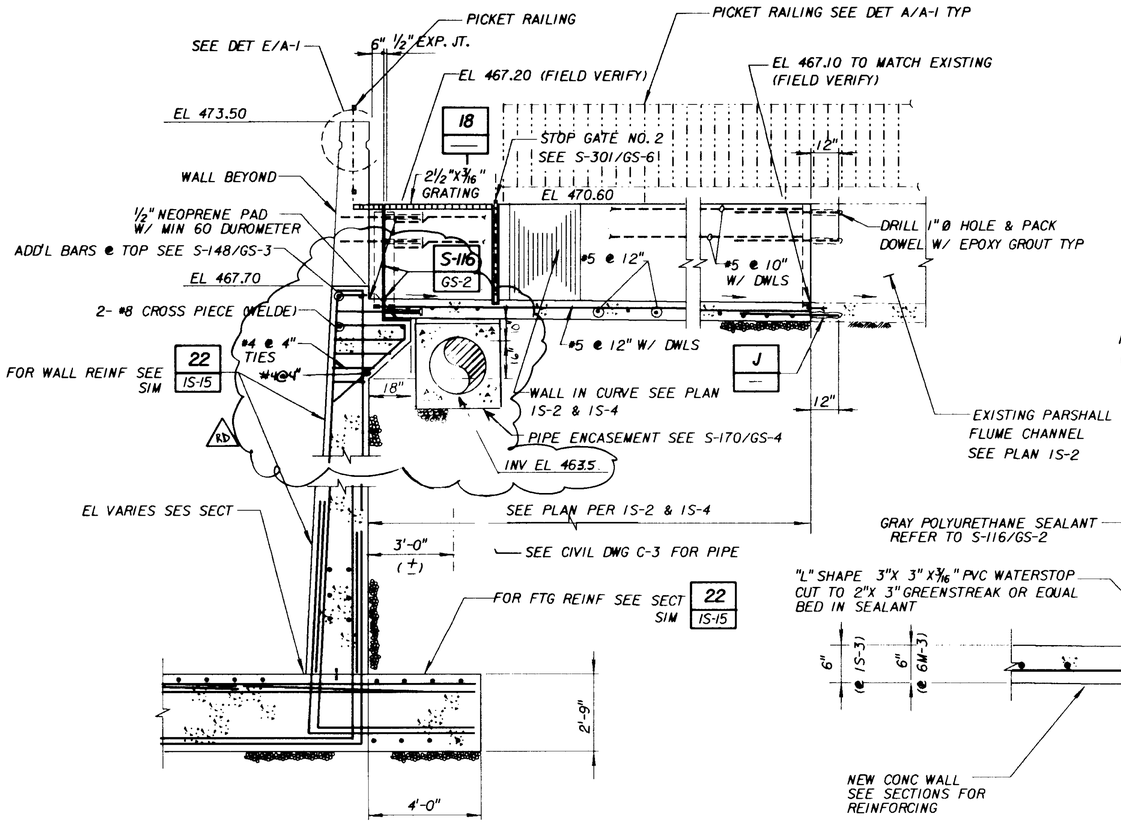

SECTION 17 (IS-2, IS-4)
SCALE : 3/8"=1'-0"

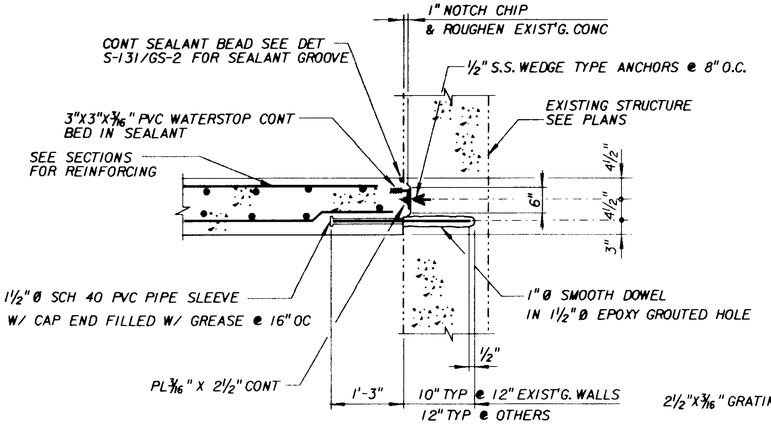

DETAIL C (4/IS-6)
SCALE : 3/4"=1'-0"

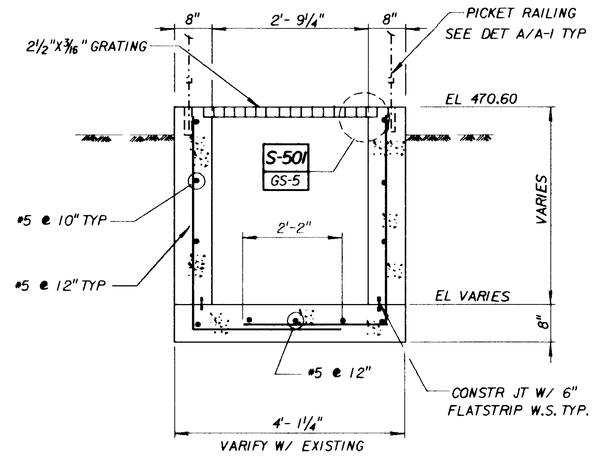

SECTION 18 (IS-2, IS-4)
SCALE : 3/4"=1'-0"

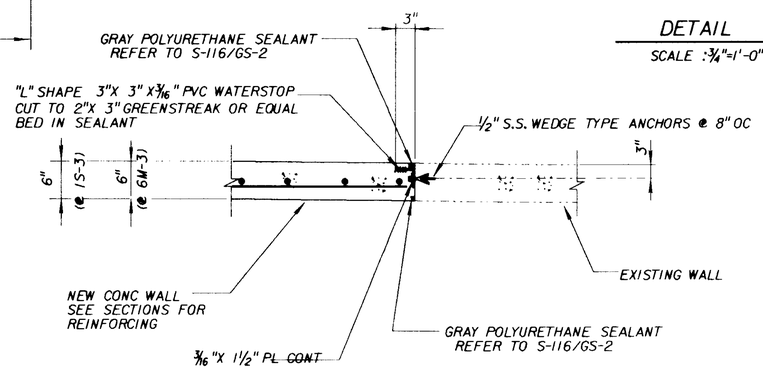

DETAIL K (6M-3, IS-3)
NTS

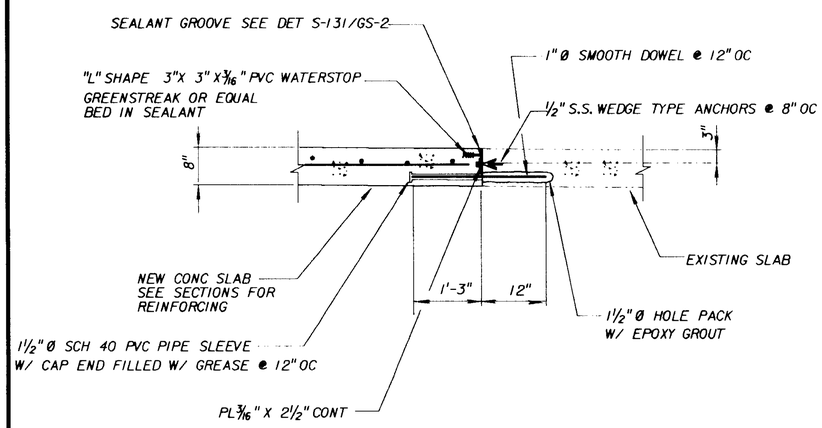

DETAIL J
SCALE : 3/4"=1'-0"

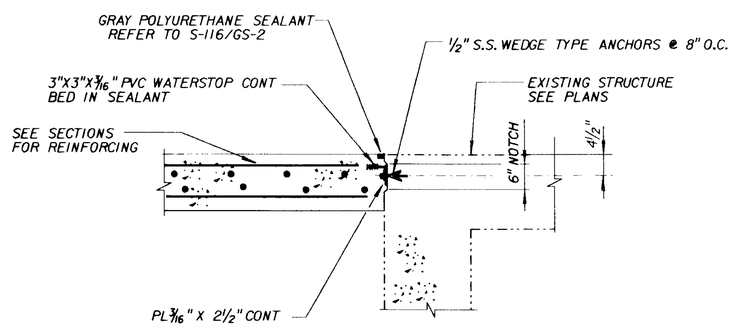

DETAIL L (6M-3)
SCALE : 3/4"=1'-0"

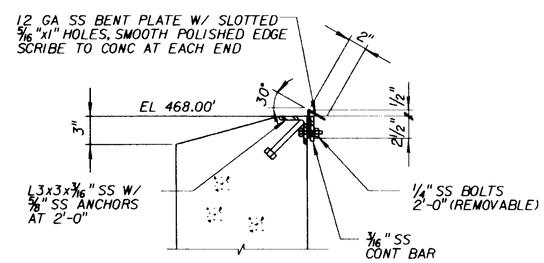

DETAIL A (IS-12)
SCALE : 1 1/2"=1'-0"

04719

PROJECT RECORD DOCUMENT
C.W. Roen Const Co.
P.O. 4 Danville, CA 94526
DATE: 1-10-94 By: BCL

08-24-94 C O'Neil

REV	DATE	BY	DESCRIPTION
RD	1-10-94	BCL	AS-Built - Errata

SCALE: AS NOTED

WARNING: 0 1/2 1 — IF THIS BAR DOES NOT MEASURE 1" THEN DRAWING IS NOT TO SCALE.

DESIGNED: [illegible]
DRAWN: [illegible]
CHECKED: [illegible]

SUBMITTED: Jorge M. Pacas — PROJECT ENGINEER — 41019 R. C. E. NO. — 11/26/90 DATE
[illegible] — JAMES M. MONTGOMERY CONSULTING ENGINEERS, INC. — 32[illegible] R. C. E. NO. — 11/26/90 DATE

JMM James M. Montgomery Consulting Engineers, Inc.
Pasadena, California

APPROVED ____ DATE
APPROVED ____ DATE

LAS VIRGENES MWD / TRIUNFO CSD
TAPIA WRF - REGIONAL FACILITIES EXPANSION IV
FILTRATION / DISINFECTION ADDITION

CHLORINE CONTACT TANK EFFLUENT AND INLET STRUCTURES - SECTIONS AND DETAILS

SHEET IS-13 OF 110 SHEETS

JOB NO. ____ FILE NO. ____

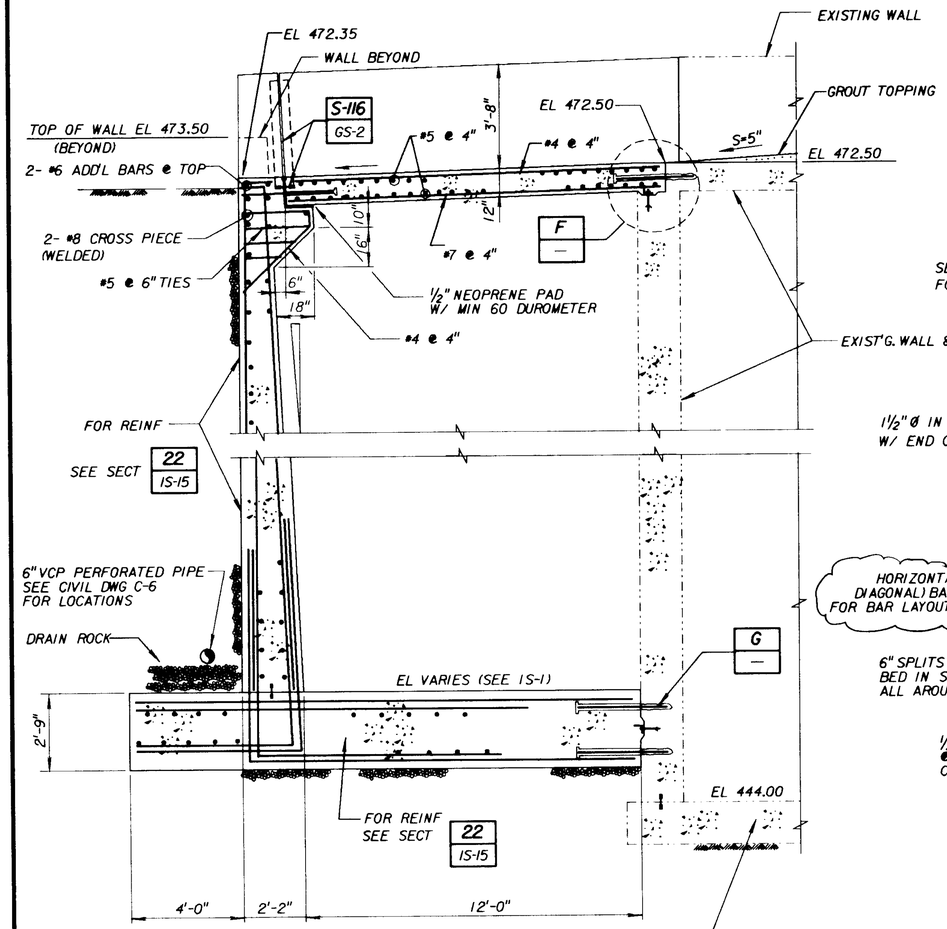

SECTION 19 IS-1 IS-3
SCALE : 3/8"=1'-0"

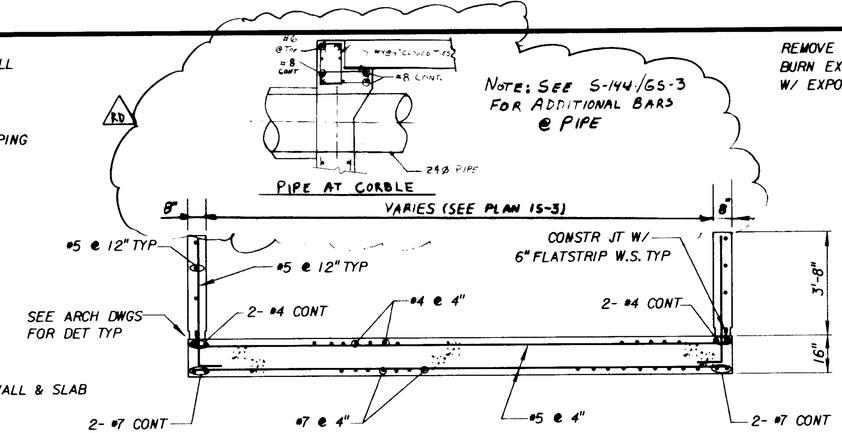

SECTION 20 IS-3
SCALE : 3/8"=1'-0"

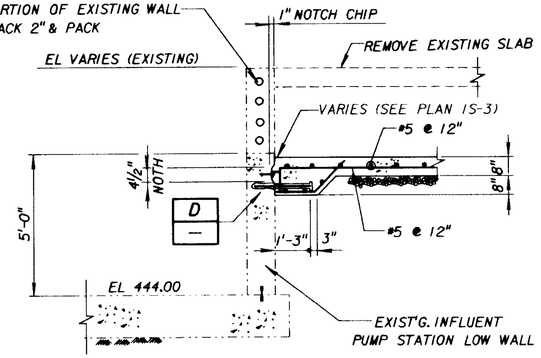

SECTION 21 IS-1 IS-3
SCALE : 3/8"=1'-0"

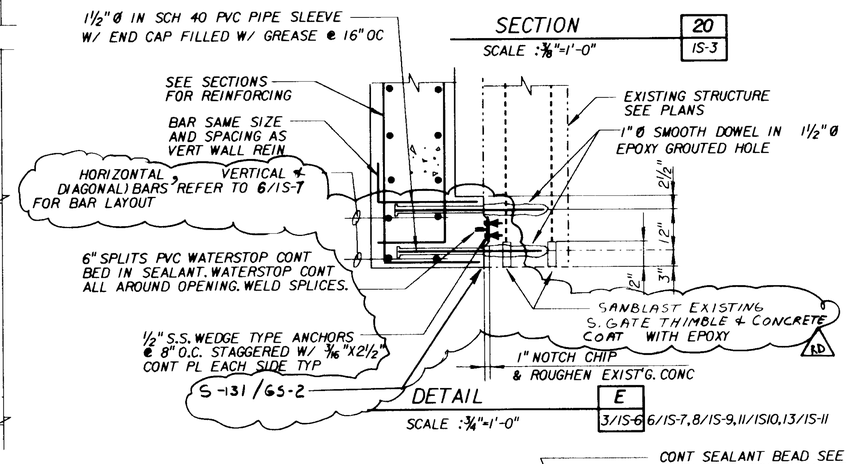

DETAIL E
SCALE : 3/4"=1'-0"
3/IS-6 6/IS-7,8/IS-9,11/IS10,13/IS-11

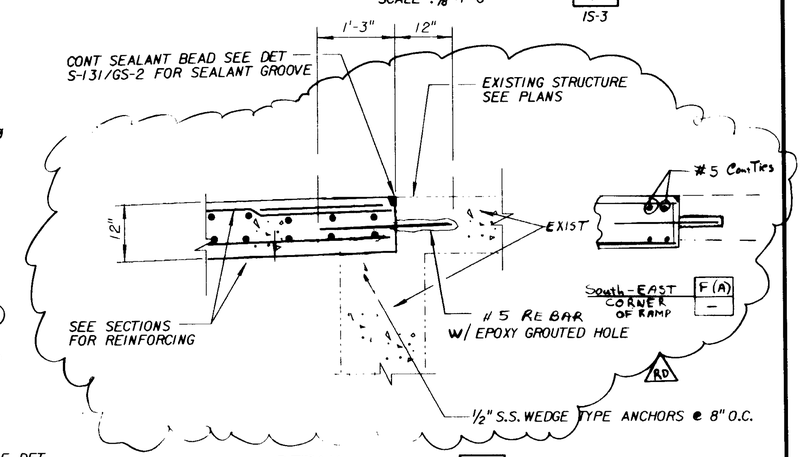

DETAIL F
SCALE : 3/4"=1'-0"

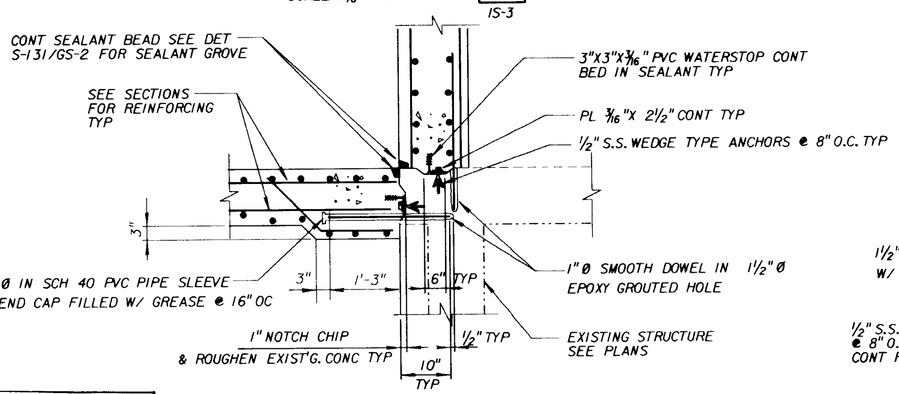

DETAIL H
SCALE : 3/4"=1'-0"
1/IS-5

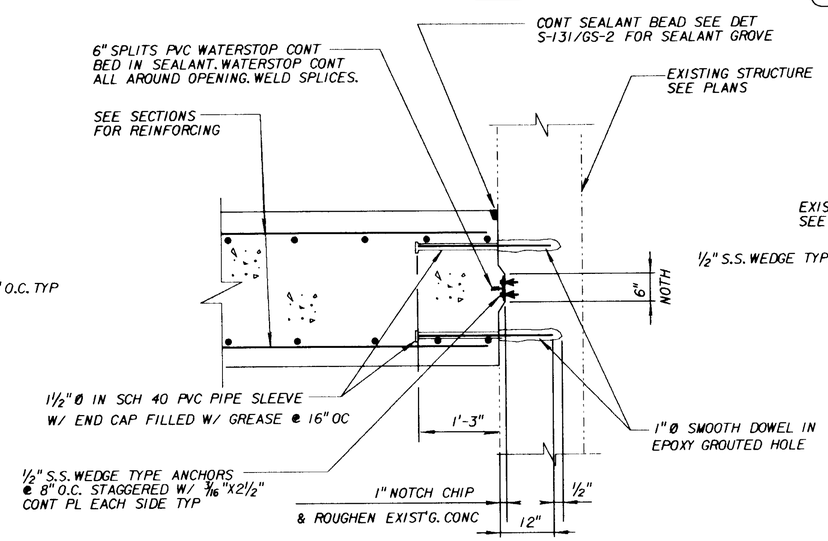

DETAIL G
SCALE : 3/4"=1'-0"
13/IS-11 15/IS-12,19/IS-14

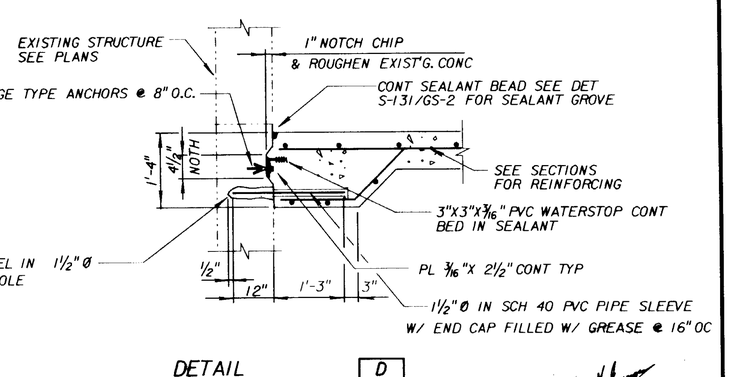

DETAIL D
SCALE : 3/4"=1'-0"

04720

9/91

PROJECT-RECORD DOCUMENT
C.W Roen Const Co.
P.O 4. Danville, CA 94526
DATE: 2-10-94 By: [illegible]

04.24.91 C.O. #

REV	DATE	BY	DESCRIPTION
RD	2-10-94	[illegible]	As-Built

SCALE: AS NOTED

WARNING: 0 1/2 1 — IF THIS BAR DOES NOT MEASURE 1" THEN DRAWING IS NOT TO SCALE.

DESIGNED [illegible]
DRAWN [illegible]
CHECKED [illegible]

SUBMITTED [illegible] 41019 R. C. E. NO. 11/26/90 DATE — PROJECT ENGINEER
[illegible] 33699 R. C. E. NO. 11/26/90 DATE — JAMES M. MONTGOMERY CONSULTING ENGINEERS, INC.

JMM James M. Montgomery Consulting Engineers, Inc.
Pasadena, California

APPROVED [illegible] DATE
APPROVED DATE

LAS VIRGENES MWD / TRIUNFO CSD
TAPIA WRF - REGIONAL FACILITIES EXPANSION IV
FILTRATION / DISINFECTION ADDITION

FILTER INFLUENT PUMP STATION RAMP
SECTIONS AND TYPICAL DETAILS

SHEET IS-14 OF 110 SHEETS

FILE No.
JOB No.

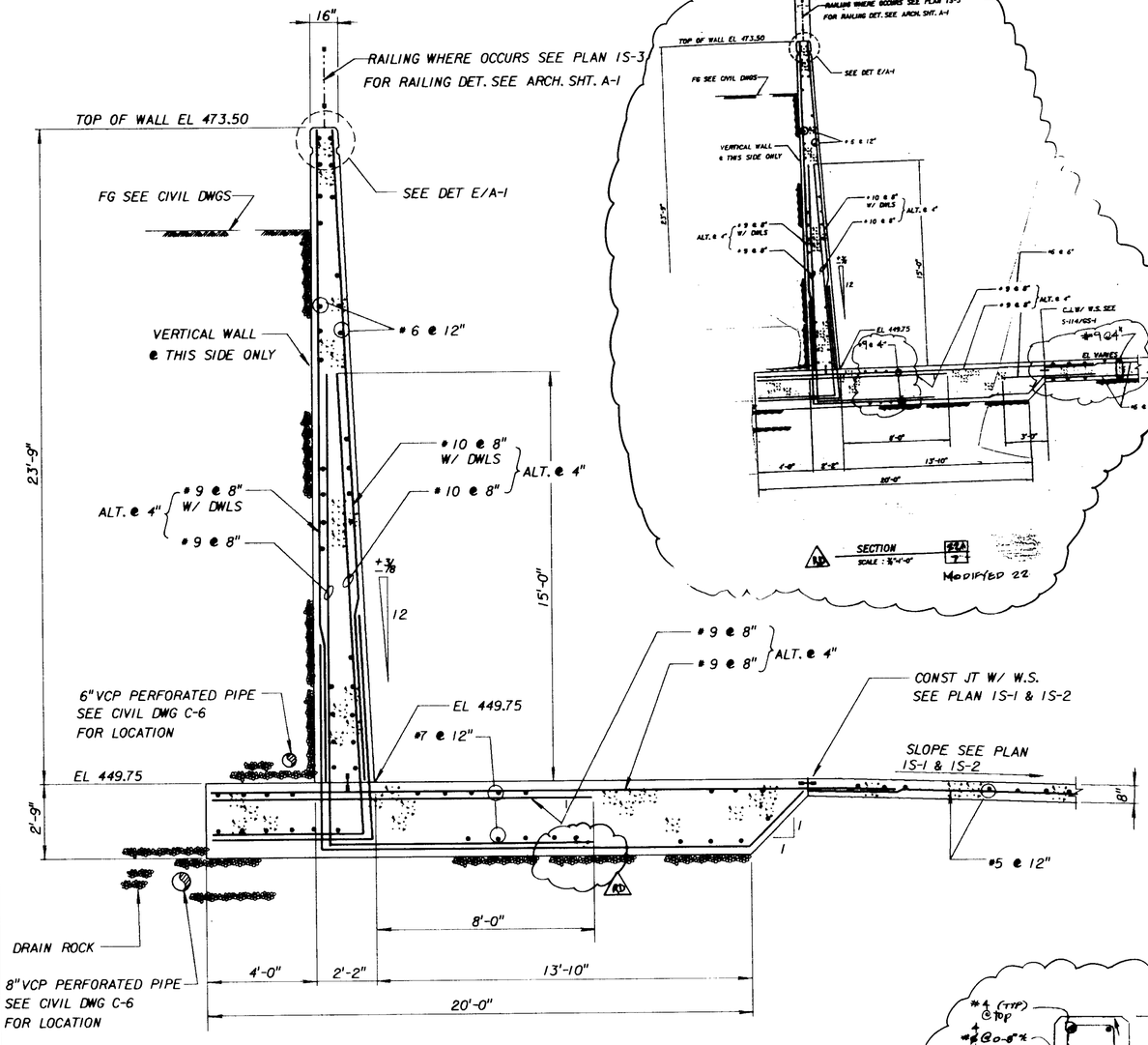

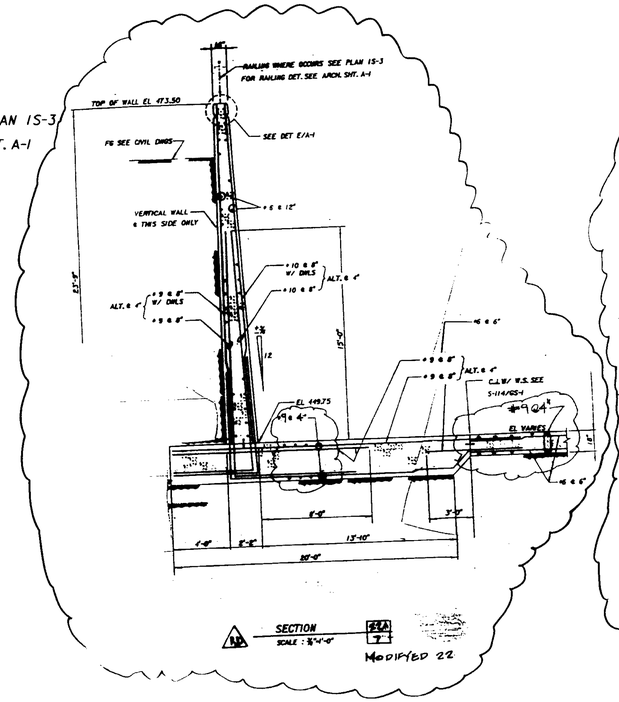

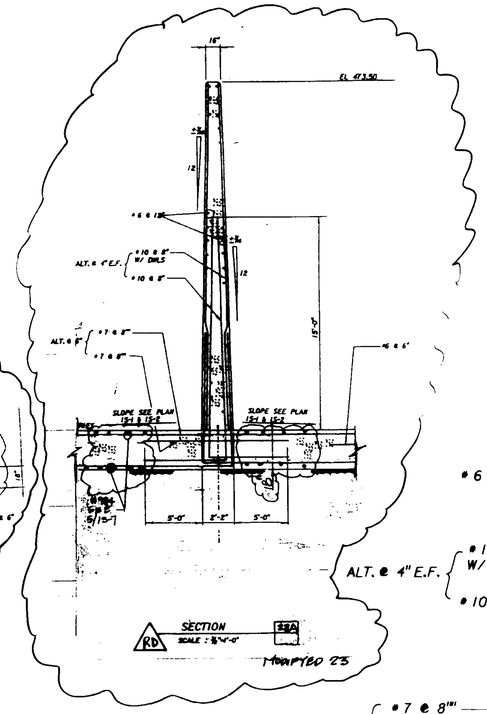

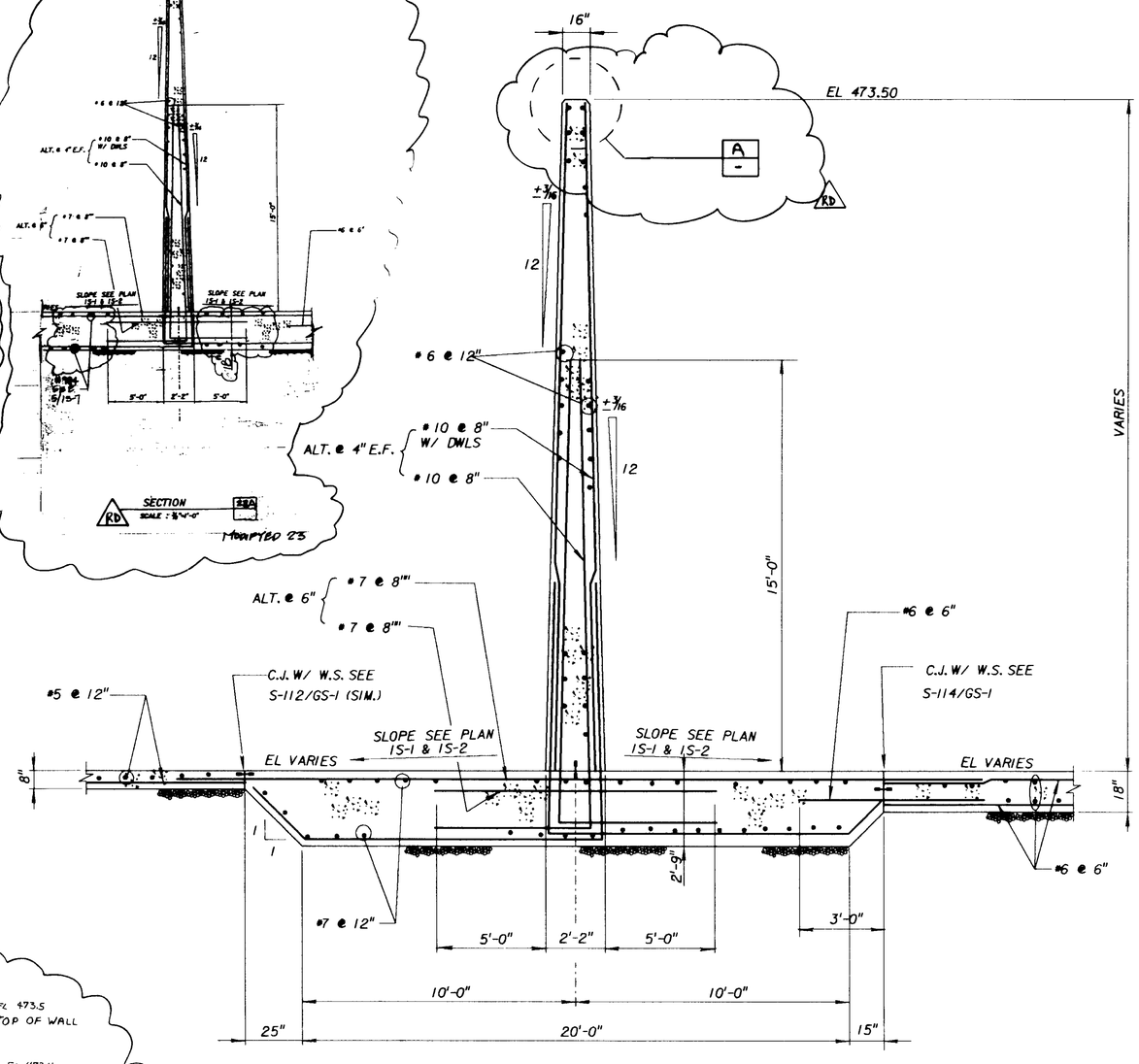

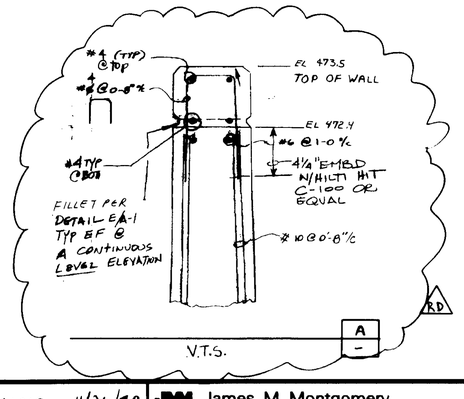

SECTION 22
SCALE : 3/8"=1'-0"
IS-1, IS-2, IS-3, IS-4, IS-13, IS-14

SECTION 23
SCALE : 3/8"=1'-0"
IS-2, IS-4

04721

PROJECT-RECORD DOCUMENT
C.W. Roen Const Co.
P.O. 4, Danville, CA 94526
DATE: 1-18-94 By: BEL

08.24.94 C. O'Neal

9/91

REV	DATE	BY	DESCRIPTION
RD	1-18-94	BEL	Detail 22A & 23A & A

SCALE: 3/8"=1'-0"

WARNING: 0 1/2 1 — IF THIS BAR DOES NOT MEASURE 1" THEN DRAWING IS NOT TO SCALE.

DESIGNED Jonathan Sand
DRAWN
CHECKED

SUBMITTED Craig M. Pacor — PROJECT ENGINEER — 41019 R. C. E. NO. — 11/26/90 DATE
JAMES M. MONTGOMERY CONSULTING ENGINEERS, INC. — 33699 R. C. E. NO. — 11/26/90 DATE

JMM James M. Montgomery Consulting Engineers, Inc.
Pasadena, California

APPROVED — DATE
APPROVED — DATE

LAS VIRGENES MWD / TRIUNFO CSD
TAPIA WRF - REGIONAL FACILITIES EXPANSION IV
FILTRATION / DISINFECTION ADDITION

PONDS
WALL SECTIONS

SHEET IS-15 OF 110 SHEETS

JOB NO. ____ FILE NO. ____

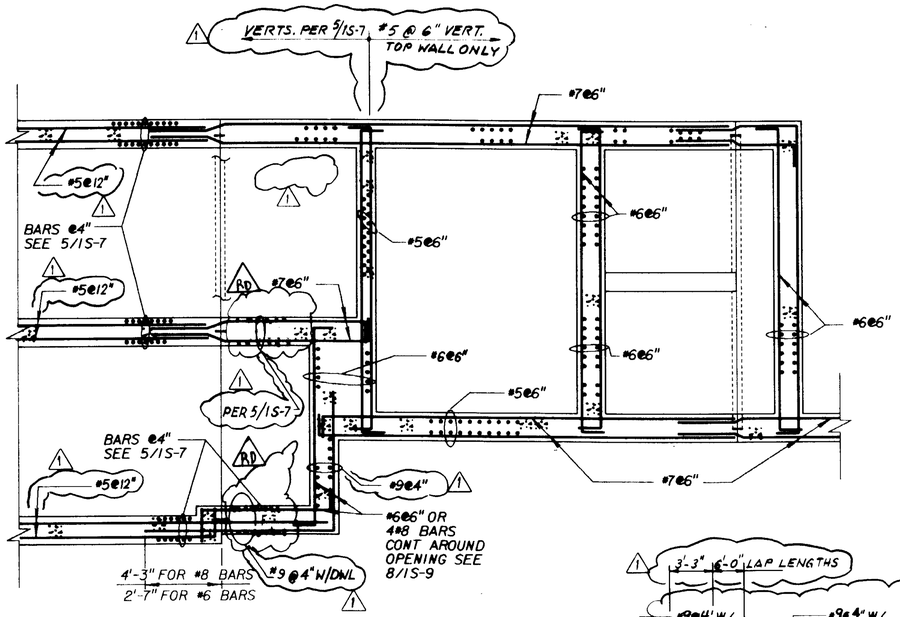

PARTIAL PLAN @ EL 462.00 | N | IS-4

SCALE : 1/4"=1'-0"

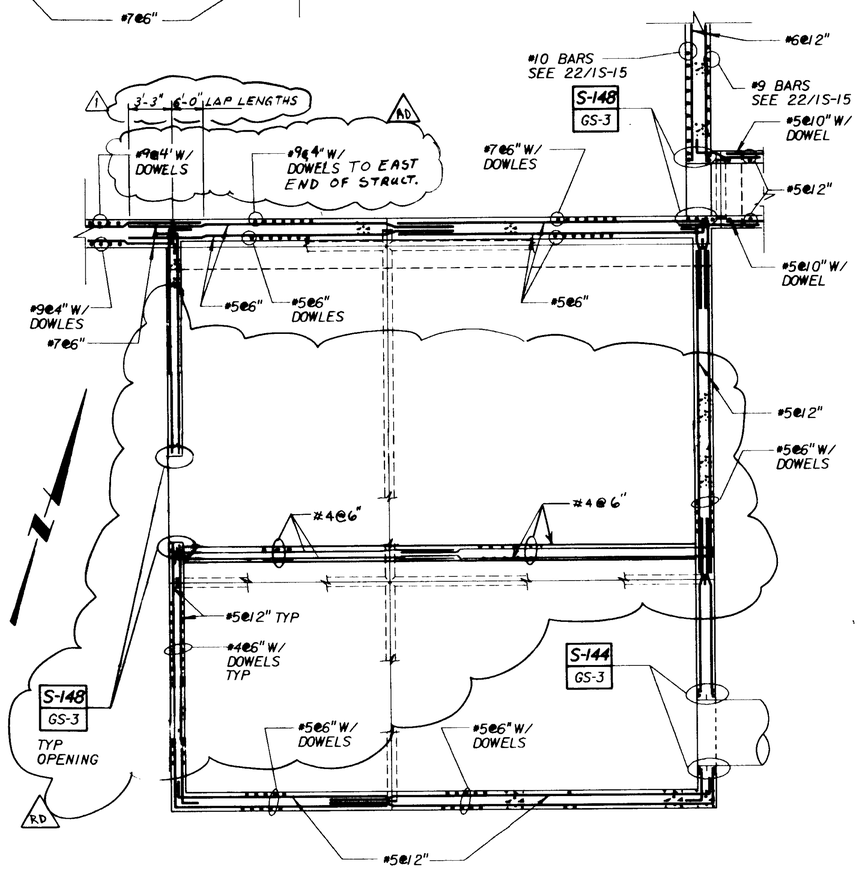

PARTIAL PLAN @ EL 465.00 | P | IS-4

SCALE : 1/4"=1'-0"

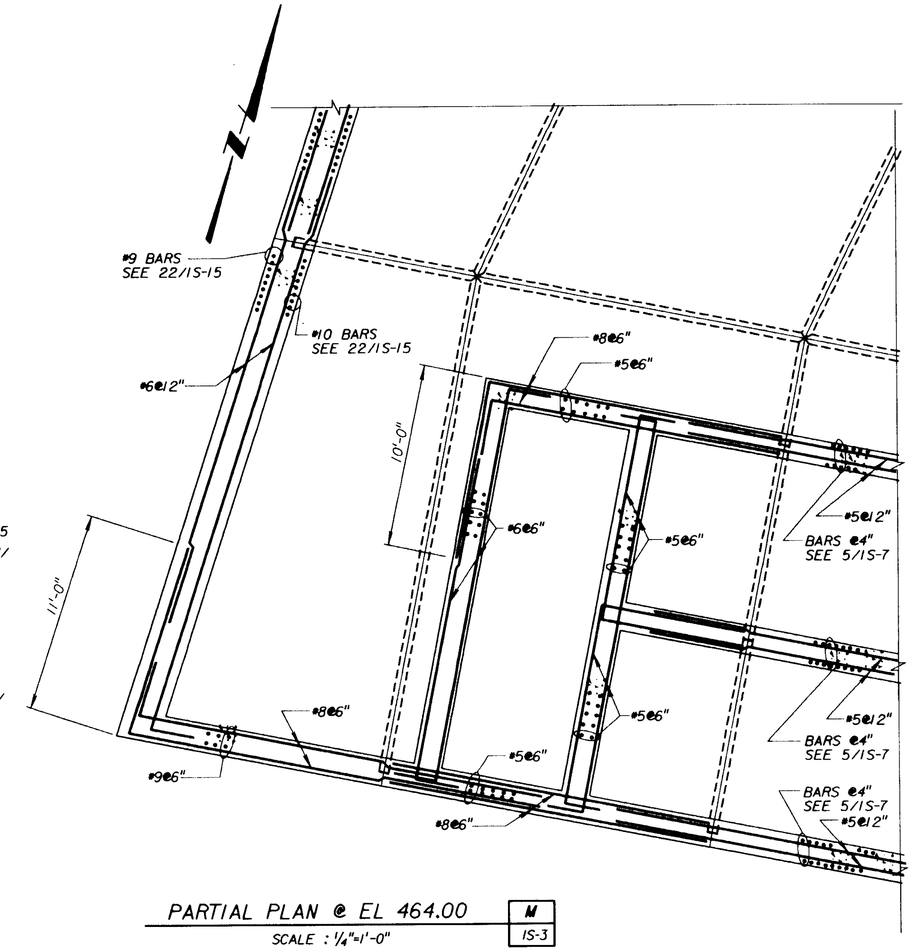

PARTIAL PLAN @ EL 464.00 | M | IS-3

SCALE : 1/4"=1'-0"

NOTE:
SEE PLANS SHEETS IS-1 THRU IS-4 FOR INFORMATION NOT SHOWN

04722

PROJECT RECORD DOCUMENT
C. W. Roen Const Co.
P. O. 4, Danville, CA 94526
DATE: 2-10-91 By: BEL

08.24.94 C O'Neil

REV	DATE	BY	DESCRIPTION
RD	2-10-91	BEL	AS-BUILT - Rebar
1	4.24.91	M.B.J.	AS BID

SCALE: AS NOTED

WARNING: 0 1/2 — IF THIS BAR DOES NOT MEASURE 1" THEN DRAWING IS NOT TO SCALE.

DESIGNED / DRAWN / CHECKED

SUBMITTED: Jorge M Pacen — PROJECT ENGINEER — R. C. E. NO. 41019 — DATE 11/26/90

JAMES M. MONTGOMERY CONSULTING ENGINEERS, INC. — R. C. E. NO. 33699 — DATE 11/26/90

James M. Montgomery Consulting Engineers, Inc. — Pasadena, California

APPROVED — DATE

APPROVED — DATE

LAS VIRGENES MWD / TRIUNFO CSD
TAPIA WRF - REGIONAL FACILITIES EXPANSION IV
FILTRATION / DISINFECTION ADDITION

CHLORINE CONTACT TANK & POND OVERFLOW PARTIAL PLANS

SHEET IS-16 OF 110 SHEETS

JOB NO. • FILE NO.

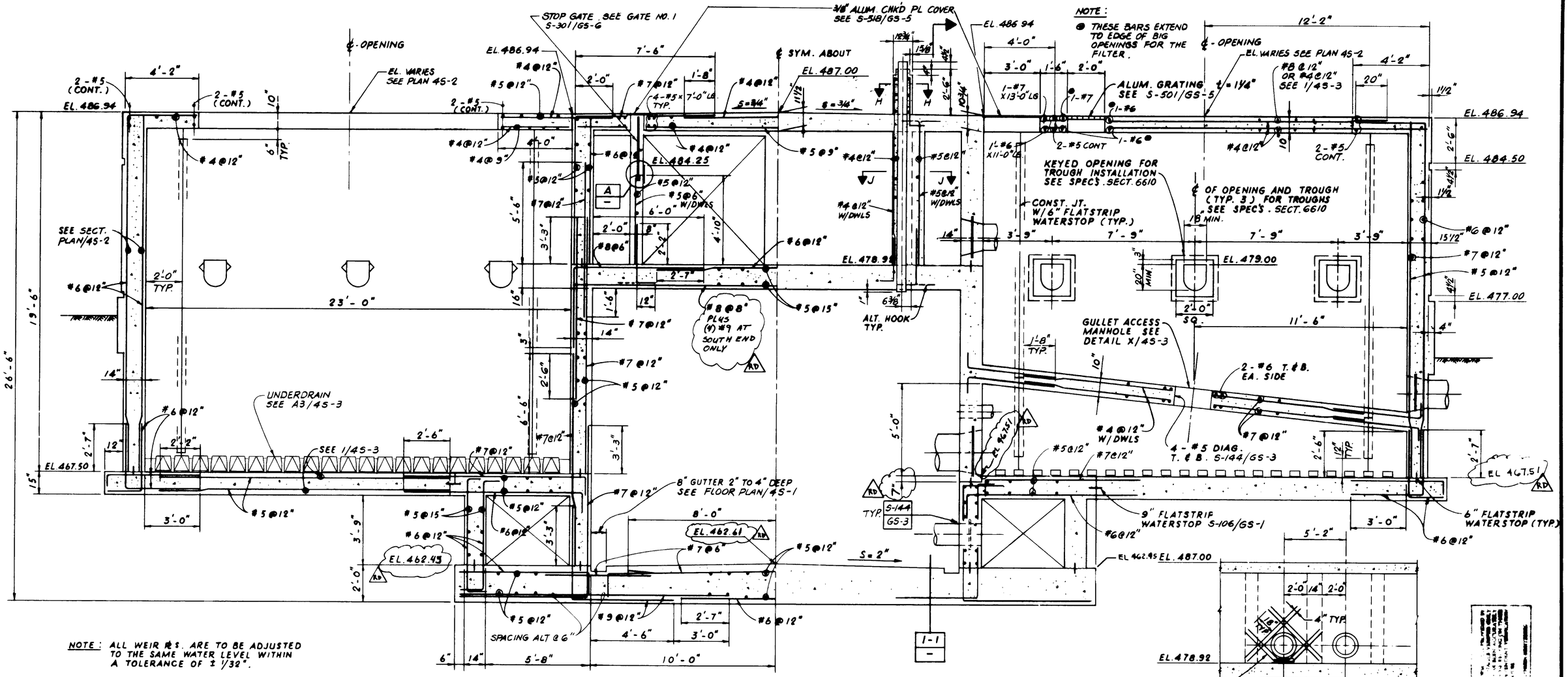

NOTE: ALL WEIR ℄'S. ARE TO BE ADJUSTED TO THE SAME WATER LEVEL WITHIN A TOLERANCE OF ± 1/32".

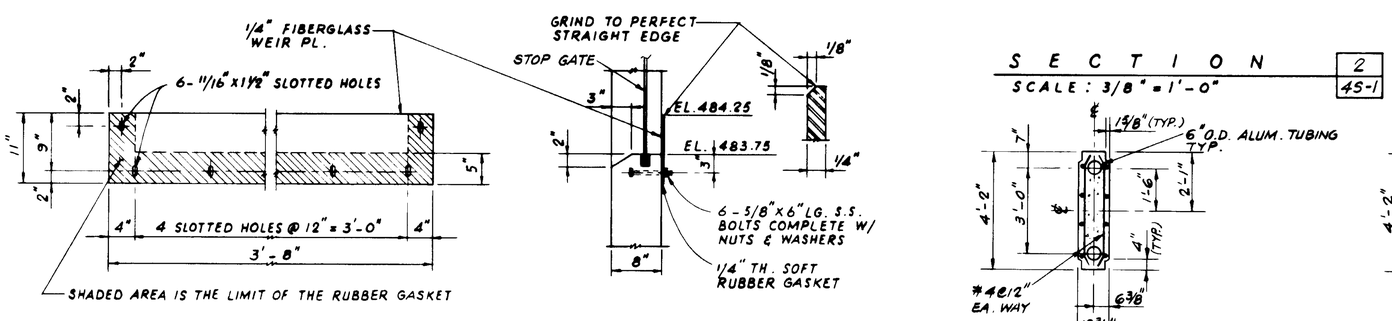

ELEVATION

SECTION

WEIR PLATE DETAIL | A | –
SCALE: 1" = 1'-0"

SECTION | 2 | 4S-1
SCALE: 3/8" = 1'-0"

SECTION | H-H | –
SCALE: 3/8" = 1'-0"

SECTION | J-J | –
SCALE: 3/8" = 1'-0"

SECTION | 1-1 | –
SCALE: 1/4" = 1'-0"

04723

PROJECT RECORD DOCUMENT
C.W. Roen Const Co.
P.O. 4 Danville, CA 94526
DATE: 2-10-94 By: RCL

REV	DATE	BY	DESCRIPTION
RD	2-10-94	RCL	AS-BUILT - ELEV + REBAR

SCALE: AS NOTED

WARNING: 0 1/8 1 — IF THIS BAR DOES NOT MEASURE 1" THEN DRAWING IS NOT TO SCALE.

DESIGNED: Arch. Fisher
DRAWN: J. Chong
CHECKED: R. Fisher

SUBMITTED: Gordon M. Bacon, PROJECT ENGINEER, 41019 R.C.E. NO., 11/20/90 DATE
RECOMMENDED: Joseph A. Wright, JAMES M. MONTGOMERY CONSULTING ENGINEERS, INC., 33699 R.C.E. NO., 11/20/90 DATE

James M. Montgomery
Consulting Engineers, Inc.
Pasadena, California

DISTRICT APPROVAL ON COVERSHEET
APPROVED — DATE

LAS VIRGENES MWD — TERRA WRF - REGIONAL WATER RECLAMATION FACILITY

SHEET 4S-4 OF [illegible] SHEETS

REGISTERED PROFESSIONAL ENGINEER M. OSAMA ABDEL-AAL NO. 34252 EXP. 9/91 CIVIL STATE OF CALIFORNIA

JOB NO. 870.0214 FILE CC 1078

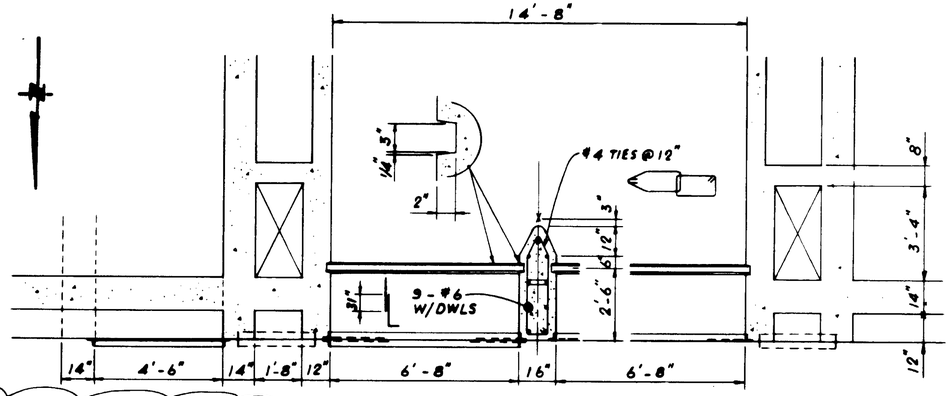

PARTIAL PLAN 1 / 4S-1
SCALE: 3/8" = 1'-0"

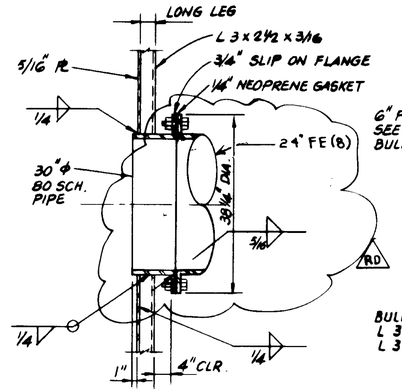

SECTION 3 / –
SCALE: 3/4" = 1'-0"

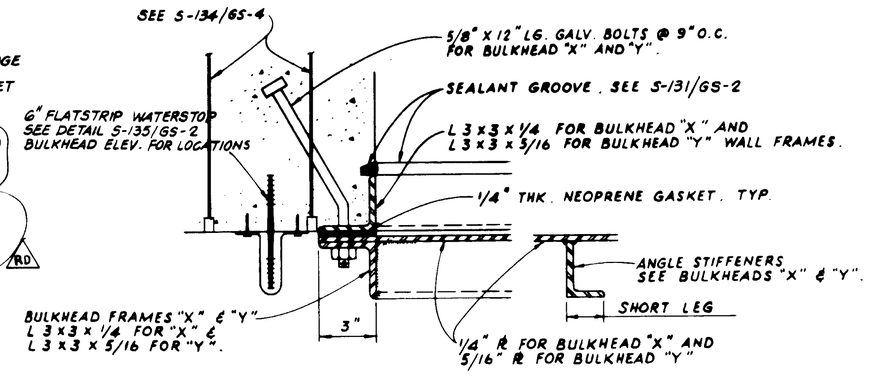

TYP. SECTION X / Y
SCALE: 3" = 1'-0"

NOTE: Pipe Connection To Bulkheads - See Sht M-7
24" FE - Flanged Connection To F.W. Conduit Bulkheads
24" SE - Welded Connection To Filter Inf. Channel - West Bulkhead

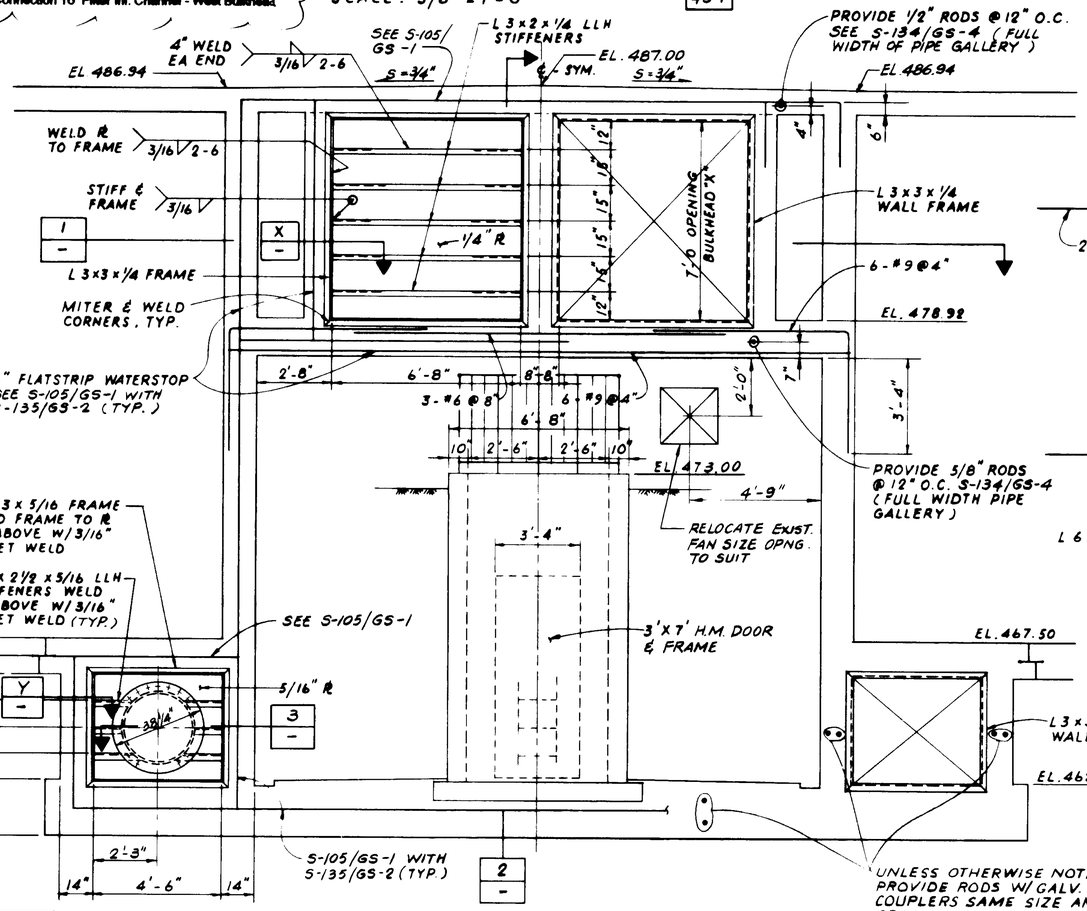

BULKHEAD ELEVATION "X" & "Y"
SCALE: 3/8" = 1'-0"

UNLESS OTHERWISE NOTED PROVIDE RODS W/ GALV. ROD COUPLERS SAME SIZE AND SPACING AS HORIZ. SLAB ENDWALL REINFORCEMENT SEE S-134/GS-4 (TYP. ALL MEMBERS TO BE EXTENDED FOR FUTURE CONSTRUCTION)

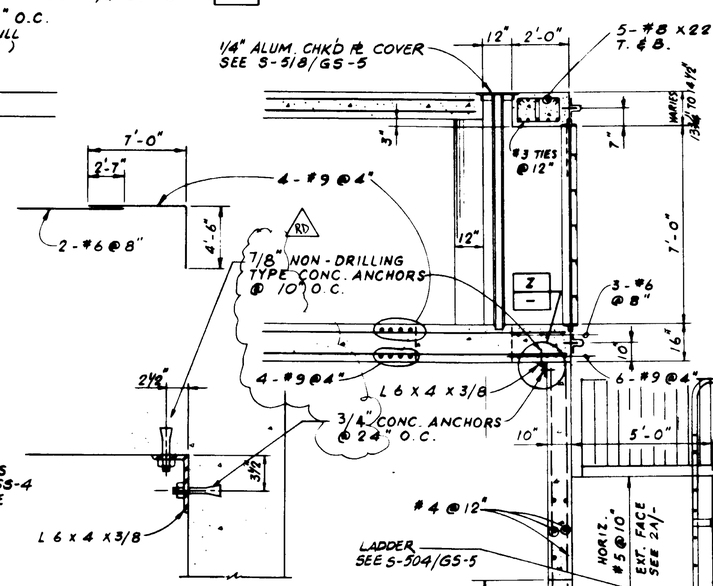

DETAIL Z / –
SCALE: 1½" = 1'-0"

SECTION 2 / –
SCALE: 3/8" = 1'-0"

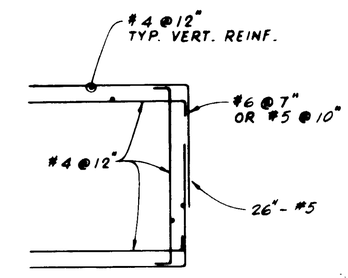

HORIZONTAL REINF. AT STAIRWELL 2A / –
NO SCALE

PICKET RAILING, SEE A/A-1 & S-511/GS-5
PROVIDE 2' SWING GATE AT TOP OF LADDER AND LADDER TO RAILING CONNECTION SIMILAR TO S-507/GS-5

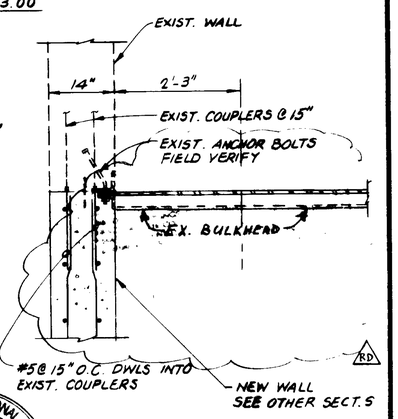

SECTION 2 / 4S-6
SCALE: 3/4" = 1'-0"

04724

PROJECT-RECORD DOCUMENT
C.W. Roen Const Co.
P.O. 4, Danville, CA 94526
DATE: 2-10-94 By: BCL

REV	DATE	BY	DESCRIPTION
RD	2-10-94	BCL	AS-BUILT

SCALE: AS NOTED

WARNING: 0 1/2 1 — IF THIS BAR DOES NOT MEASURE 1" THEN DRAWING IS NOT TO SCALE.

DESIGNED / DRAWN / CHECKED

SUBMITTED — PROJECT ENGINEER — 41019 R.C.E. NO. — 11/26/90 DATE
RECOMMENDED — CONSULTING ENGINEERS, INC. — 33699 R.C.E. NO. — 11/26/90 DATE

James M. Montgomery
Consulting Engineers, Inc.
Pasadena, California

APPROVED — DISTRICT APPROVAL ON COVERSHEET — DATE
APPROVED — DATE

LAS VIRGENES MWD / TRIUNFO SD
TAPIA WRF - REGIONAL FACILITIES EXPANSION IV
FILTRATION / DISINFECTION ADDITION
FILTERS - BULKHEAD AND PIPE GALLERY STAIRWELL DETAILS

SHEET 4S-5 OF 119 SHEETS

JOB NO. 870.0214 FILE

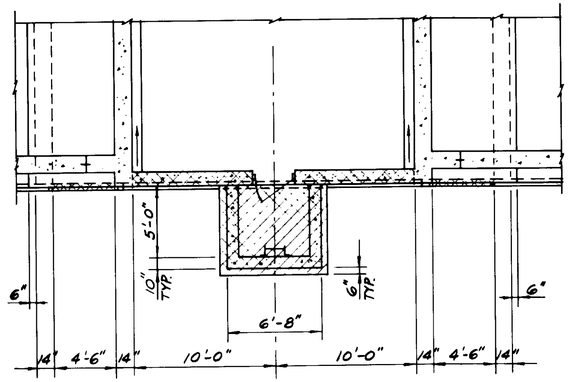

PARTIAL PLAN 1
SCALE: 3/16" = 1'-0"

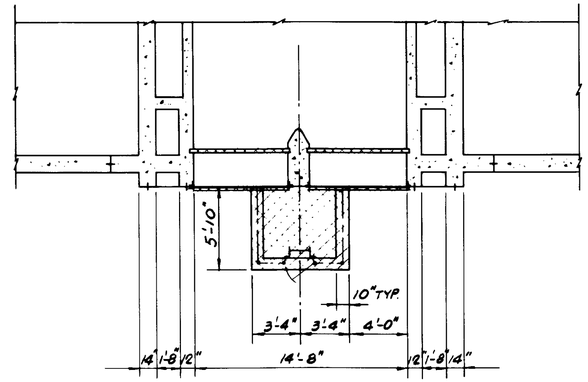

PARTIAL PLAN 2
SCALE: 3/16" = 1'-0"

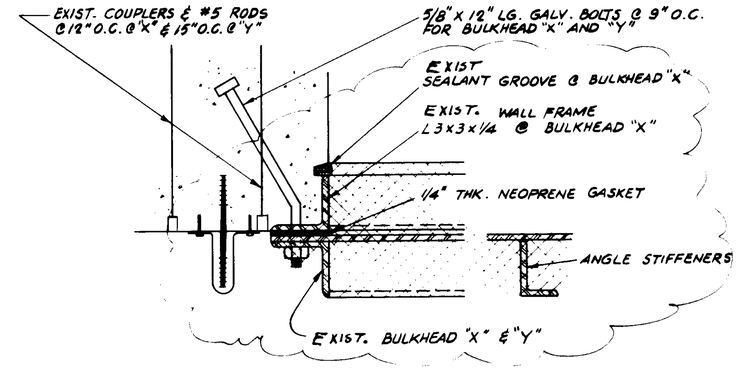

TYP. SECTION
SCALE: 3" = 1'-0"

X	Y
–	–

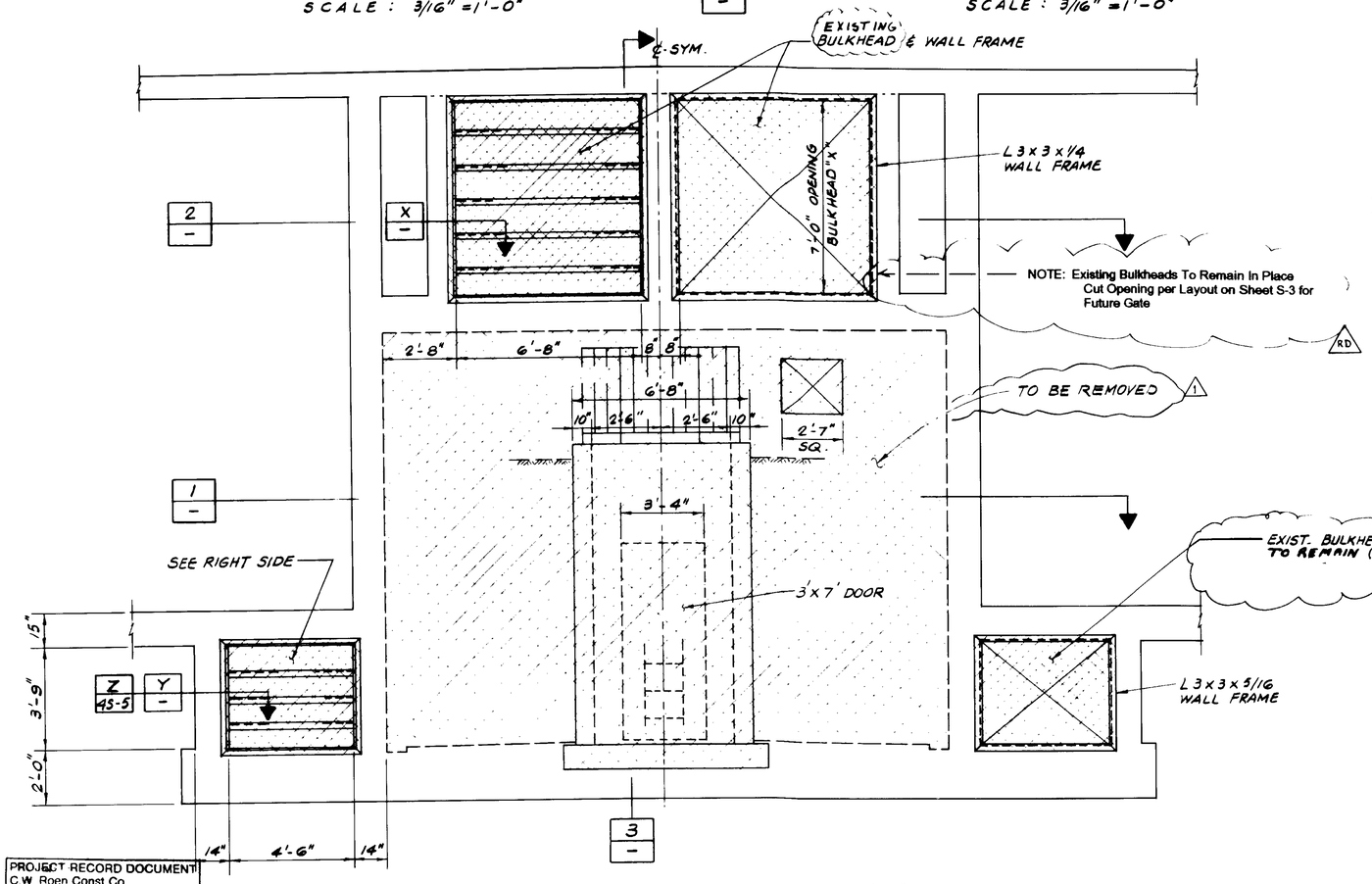

BULKHEAD ELEVATION "X" & "Y"
SCALE: 3/8" = 1'-0"

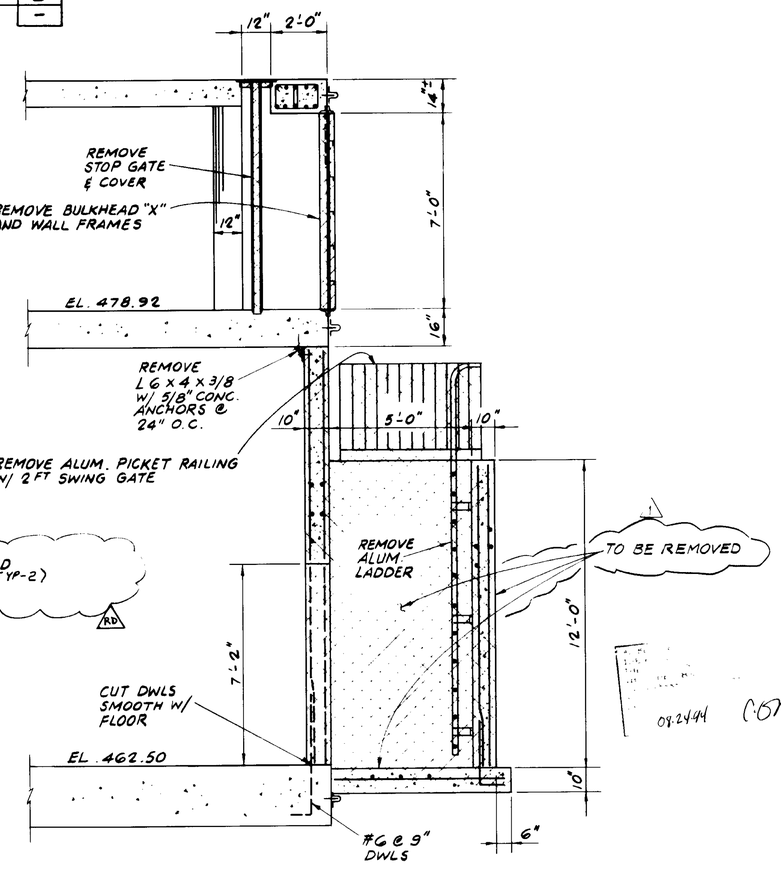

SECTION 3
SCALE: 3/8" = 1'-0"

08-24-94 C.O.Nel

04725

PROJECT RECORD DOCUMENT
C W Roen Const Co.
P.O. 4 Danville, CA 94526
DATE: 2-10-94 By: BEL

REV	DATE	BY	DESCRIPTION
RD	2-10-94	BEL	AS-BUILT
1	4-24-91	M.B.J.	AS BID

SCALE: AS NOTED

WARNING 0 1/2 1 — IF THIS BAR DOES NOT MEASURE 1" THEN DRAWING IS NOT TO SCALE.

DESIGNED / DRAWN / CHECKED

SUBMITTED: Jorge M. Pacey — PROJECT ENGINEER — R.C.E. NO. 41019 — DATE 11/26/90

RECOMMENDED: James A. Wright — JAMES M. MONTGOMERY CONSULTING ENGINEERS, INC. — R.C.E. NO. 33699 — DATE 11/26/90

JMM James M. Montgomery Consulting Engineers, Inc. — Pasadena, California

APPROVED — DATE — SEE LAST APPROVAL ON COVERSHEET

APPROVED — DATE

LAS VIRGENES MWD / TRUNFO CSD
TAPIA WRF - REGIONAL FACILITIES EXPANSION IV
FILTRATION / DISINFECTION ADDITION

FILTERS - DEMOLITION PLANS AND SECTIONS

SHEET 43-6 OF 110 SHEETS

JOB NO. 870.0214 FILE CC

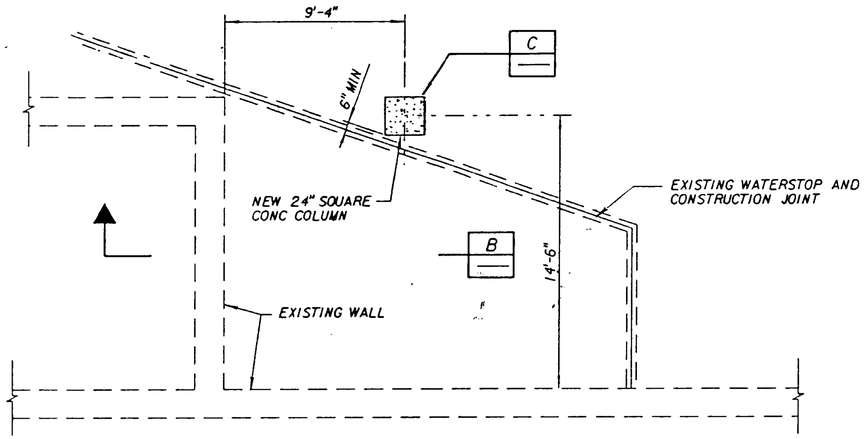

LOWER PLAN

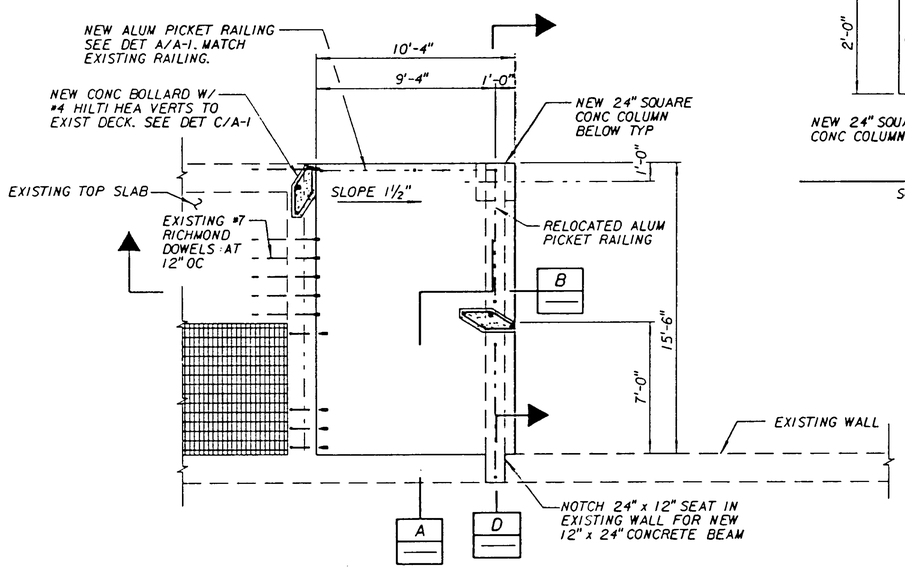

TOP PLAN

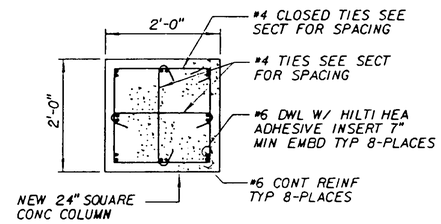

DETAIL C

SCALE 1" = ¾"

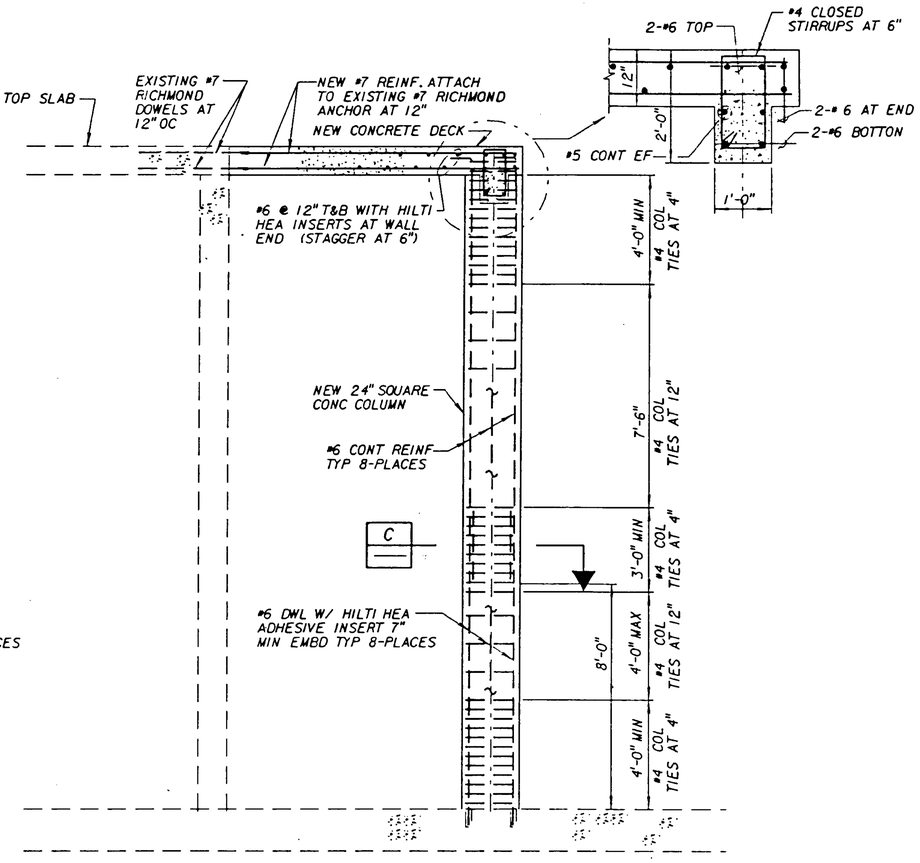

SECTION B

SCALE 1" = ⅜"

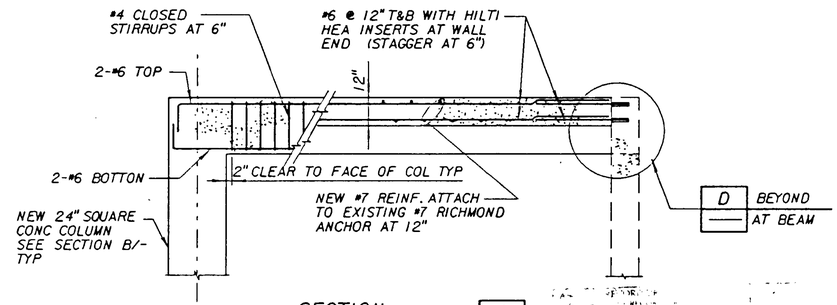

SECTION A

SCALE 1" = ⅜"

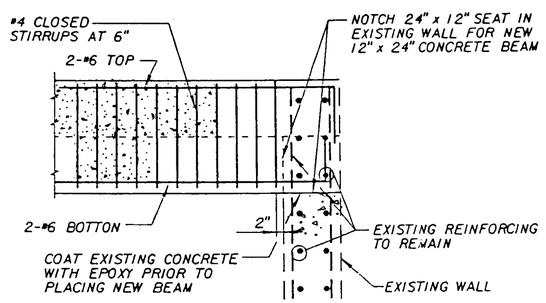

SECTION D

SCALE 1" = ¾"

08-24-94 C O'Neal

PROJECT RECORD DOCUMENT
C W Ross Canal Co
P O & Danville, CA 94526
DATE 2-10-94 By BEA

04726

REV	DATE	BY	DESCRIPTION
RD	2-10-94	BEA	AS-BUILT

SCALE:

WARNING: 0 ½ 1 — IF THIS BAR DOES NOT MEASURE 1" THEN DRAWING IS NOT TO SCALE.

DESIGNED
DRAWN
CHECKED

SUBMITTED
PROJECT ENGINEER — R. C. E. NO. — DATE
JAMES M. MONTGOMERY CONSULTING ENGINEERS, INC. — R. C. E. NO. — DATE

JMM James M. Montgomery Consulting Engineers, Inc.
Walnut Creek, California

APPROVED — DATE
APPROVED — DATE

LAS VIRGENES MWD / TRIUNFO CSD
TAPIA WRF - REGIONAL FACILITIES EXPANSION IV
FILTRATION / DISINFECTION ADDITION

EXPANSION MODIFICATIONS - I

SHEET S-1 OF • SHEETS

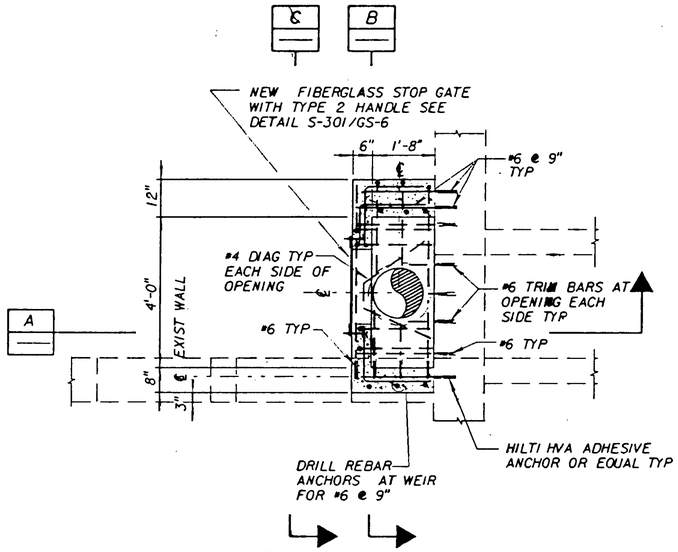

LOWER PLAN

NIC

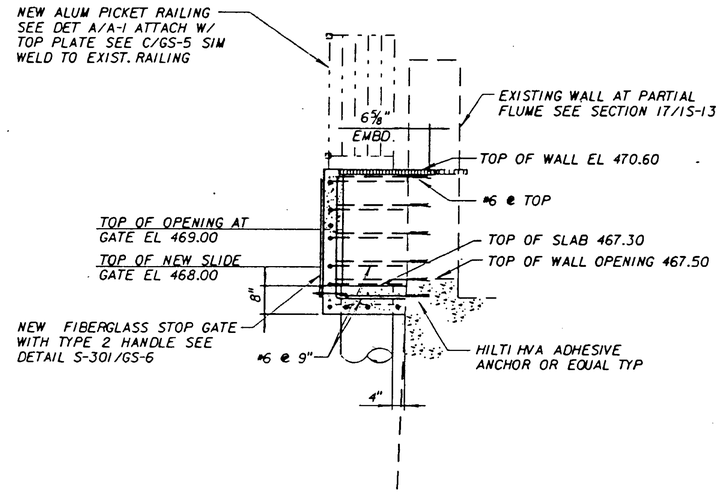

SECTION A

NIC

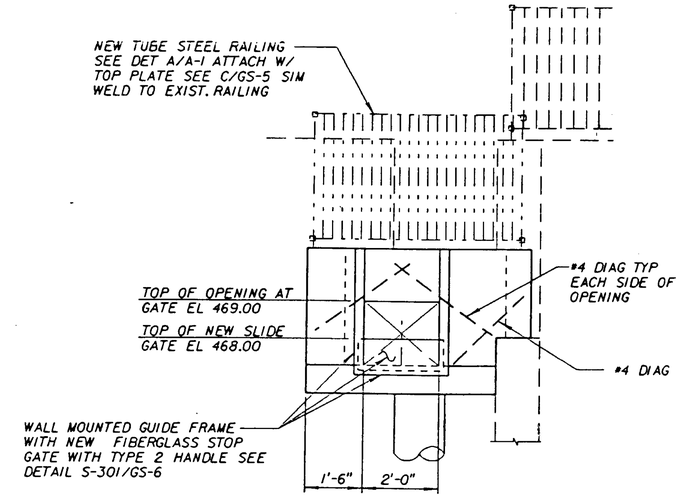

SECTION C

N.I.C.

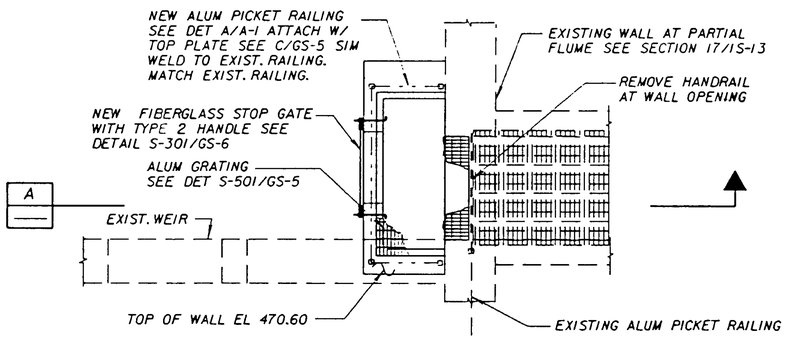

TOP PLAN

NIC

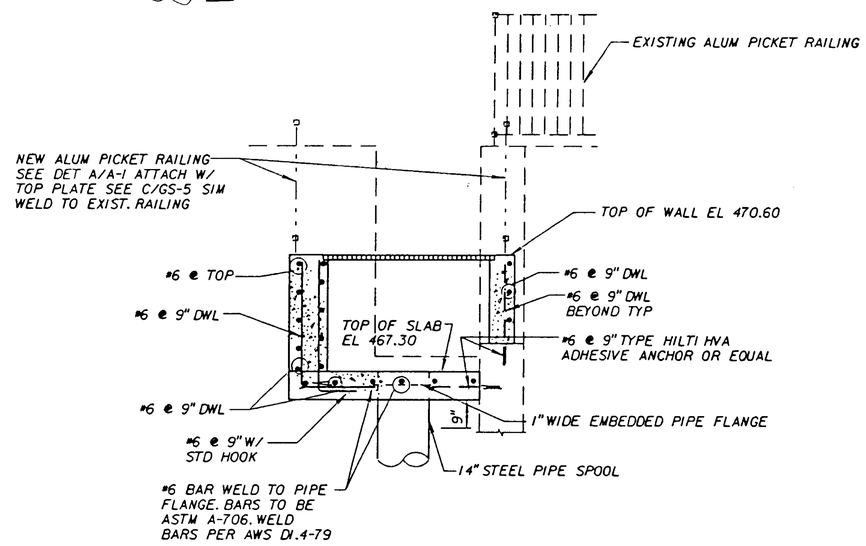

SECTION B

N.I.C.

FUTURE IMPROVEMENTS

08.24.94 C. O'Neal

PROJECT RECORD DOCUMENT
J.W. Ahern Const Co.
P.O. 4 Danville, CA 94526
DATE 2-10-94 By RBL

04727

REV	DATE	BY	DESCRIPTION
RD	2-10-94	RBL	This Sheet = NIC

SCALE:

WARNING: 0 ½ 1 — IF THIS BAR DOES NOT MEASURE 1" THEN DRAWING IS NOT TO SCALE.

DESIGNED ____ DRAWN ____ CHECKED ____

SUBMITTED: PROJECT ENGINEER ____ R. C. E. NO. ____ DATE ____
JAMES M. MONTGOMERY CONSULTING ENGINEERS, INC. ____ R. C. E. NO. ____ DATE ____

JMM James M. Montgomery Consulting Engineers, Inc. Walnut Creek, California

APPROVED ____ DATE ____
APPROVED ____ DATE ____

LAS VIRGENES MWD / TRIUNFO CSD
TAPIA WRF - REGIONAL FACILITIES EXPANSION IV
FILTRATION / DISINFECTION ADDITION

EXPANSION MODIFICATIONS - II

SHEET S-2 OF • SHEETS

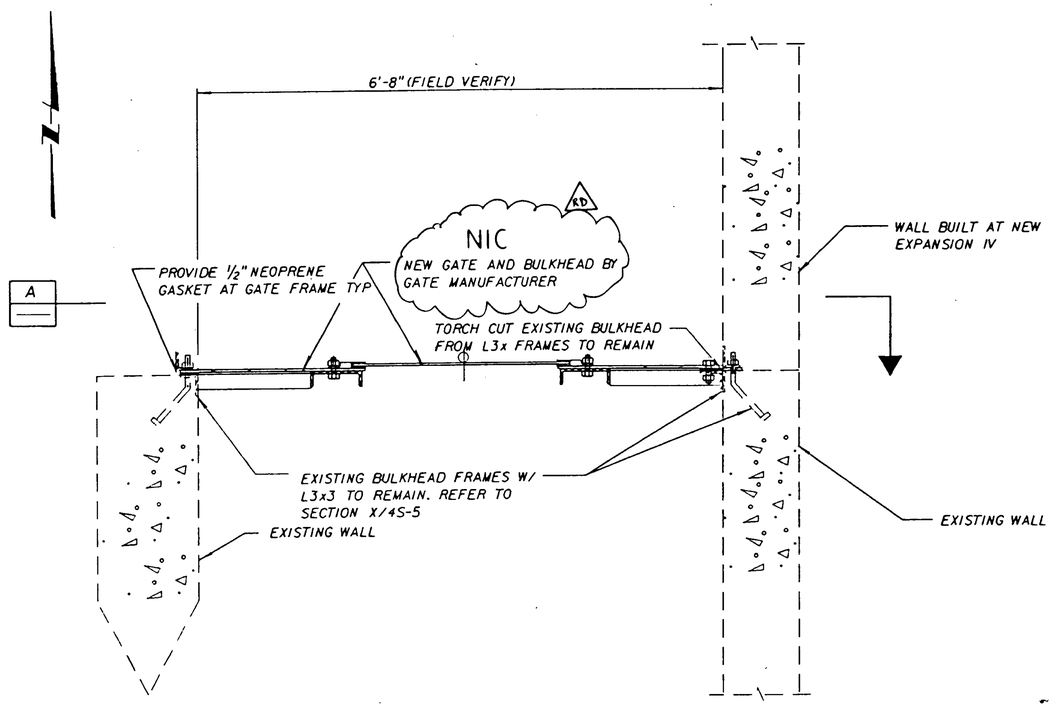

PLAN

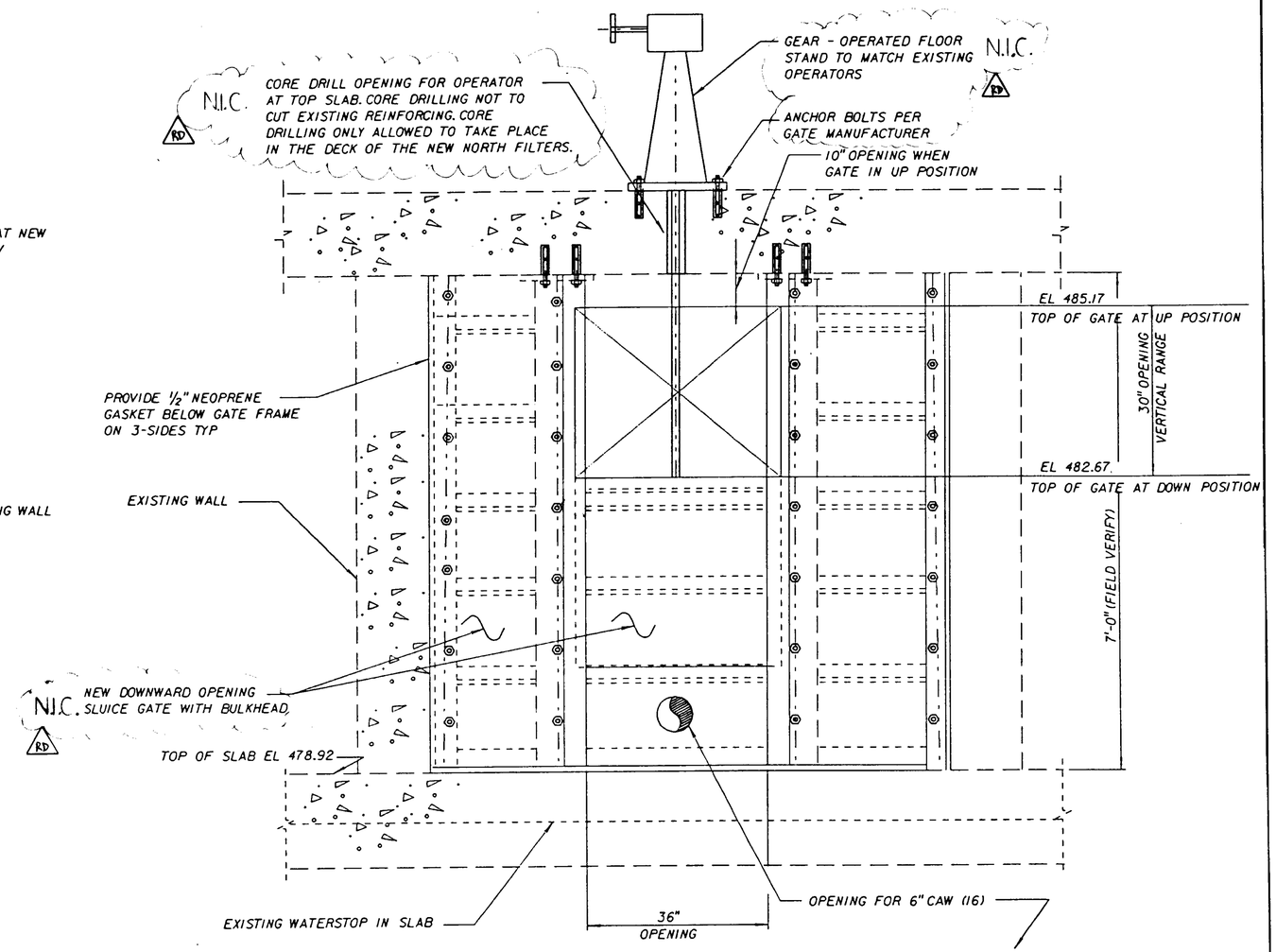

NOTES:

1. CONTRACTOR NOT TO PLACE ANCHOR BOLTS THROUGH WATERSTOPS.
2. CONTRACTOR ONLY ALLOWED TO DRILL ADHESIVE ANCHORS AT NEW NORTH FILTERS.
3. CONTRACTOR NOT TO DRILL THROUGH EXISTING REINFORCING FOR BOLT PLACEMENT.
4. MANUFACTURER MAY ELECT TO FIELD WELD NEW GATE FRAME TO EXISTING BULKHEAD FRAME.
5. GATE MANUFACTURER SHALL DESIGN AND SUBMIT TO THE ENGINEER FOR REVIEW ALL ELEMENTS OF THE GATE/FRAME INCLUDING CONNECTIONS TO EXISTING.
6. GATE/FRAME SHOWN FOR SCHEMATIC PURPOSES ONLY.

NIC
RD
NIC

MATERIAL OF CONSTRUCTION:

GATE: CAST IRON
BULKHEAD: STAINLESS STEEL
ANCHOR BOLTS: STAINLESS STEEL

SECTION A

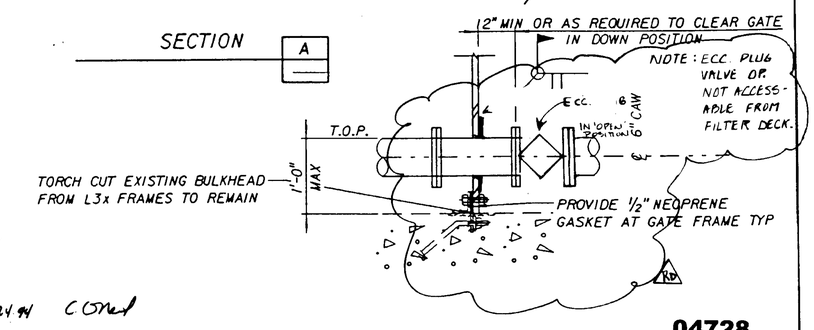

2-10-99 BEJ

08.24.99 CGM

04728

REV	DATE	BY	DESCRIPTION
RD	2-10-99	BEJ	AS-BUILT

SCALE:

WARNING 0 1/2 1 IF THIS BAR DOES NOT MEASURE 1" THEN DRAWING IS NOT TO SCALE.

DESIGNED
DRAWN
CHECKED

SUBMITTED
PROJECT ENGINEER R. C. E. NO. DATE
JAMES M. MONTGOMERY CONSULTING ENGINEERS, INC. R. C. E. NO. DATE

JMM James M. Montgomery Consulting Engineers, Inc.
Walnut Creek, California

APPROVED DATE
APPROVED DATE

LAS VIRGENES MWD / TRIUNFO CSD
TAPIA WRF - REGIONAL FACILITIES EXPANSION IV
FILTRATION / DISINFECTION ADDITION

EXPANSION MODIFICATIONS - III

SHEET S-3 OF • SHEETS

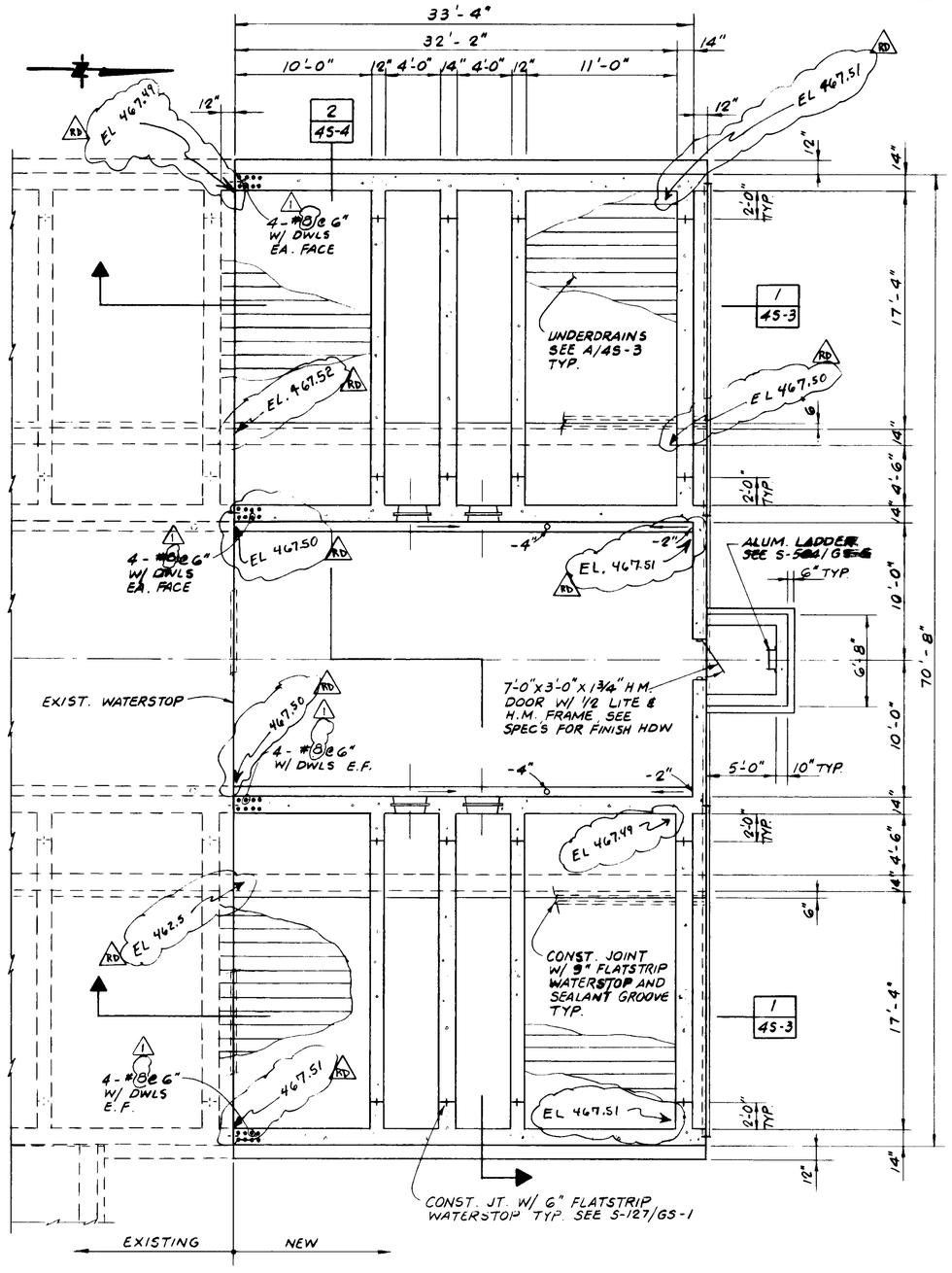

FLOOR AND FOUNDATION PLAN
AT ELEV. 468.50
SCALE : 3/16" = 1'-0"

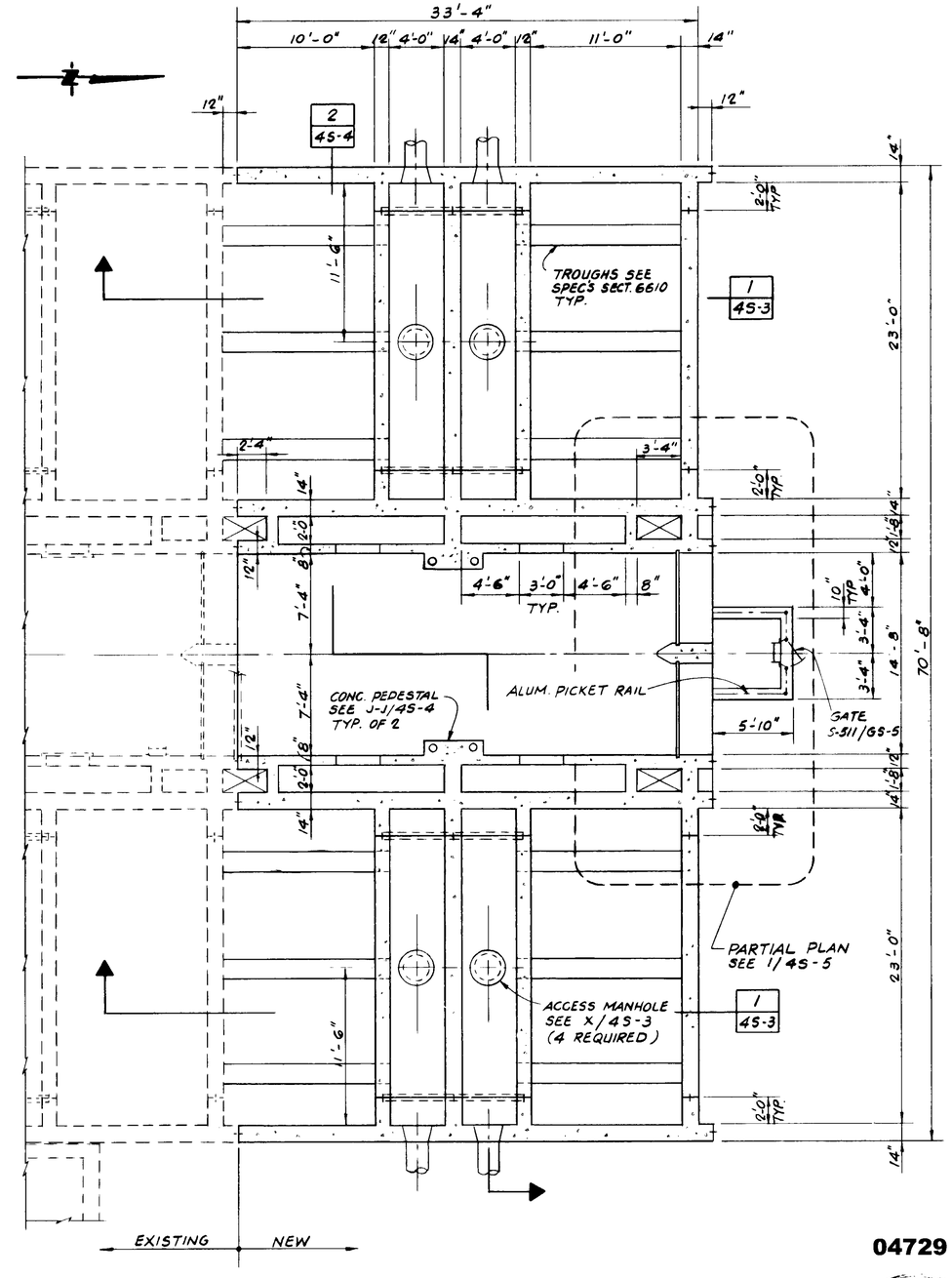

SECTIONAL PLAN AT ELEV. 479.00
SCALE : 3/16" = 1'-0"

04729

PROJECT-RECORD DOCUMENT
C.W. Roen Const Co.
P.O. 4, Danville, CA 94526
DATE: 2-10-94 By: BEL

REV	DATE	BY	DESCRIPTION
RD	2-10-94	BEL	AS-BUILT - ELEV.
1	4-25-91	M.B.J.	AS BID

SCALE: AS NOTED

WARNING: 0 1/2 1 — IF THIS BAR DOES NOT MEASURE 1" THEN DRAWING IS NOT TO SCALE.

DESIGNED: EME
DRAWN: JSCh
CHECKED: RDP

SUBMITTED: Jose M. Pacas — PROJECT ENGINEER — 41019 R.C.E. NO. — 11/26/90 DATE
RECOMMENDED: James M. Montgomery — JAMES M. MONTGOMERY CONSULTING ENGINEERS, INC. — 33699 R.C.E. NO. — 11/26/90 DATE

JMM James M. Montgomery Consulting Engineers, Inc.
Pasadena, California

APPROVED: DISTRICT ENGINEER — DATE
APPROVED — DATE

LAS VIRGENES MWD / TRIUNFO CSD
TAPIA WRF - REGIONAL FACILITIES EXPANSION IV
FILTRATION / DISINFECTION ADDITION

FILTERS - PLAN AT ELEV. 479.00 & FOUNDATION PLAN

SHEET 4S-1 OF 9 SHEETS

08 24 94 C O'Neil

JOB NO. 870 0214 FILE ____ CC ____

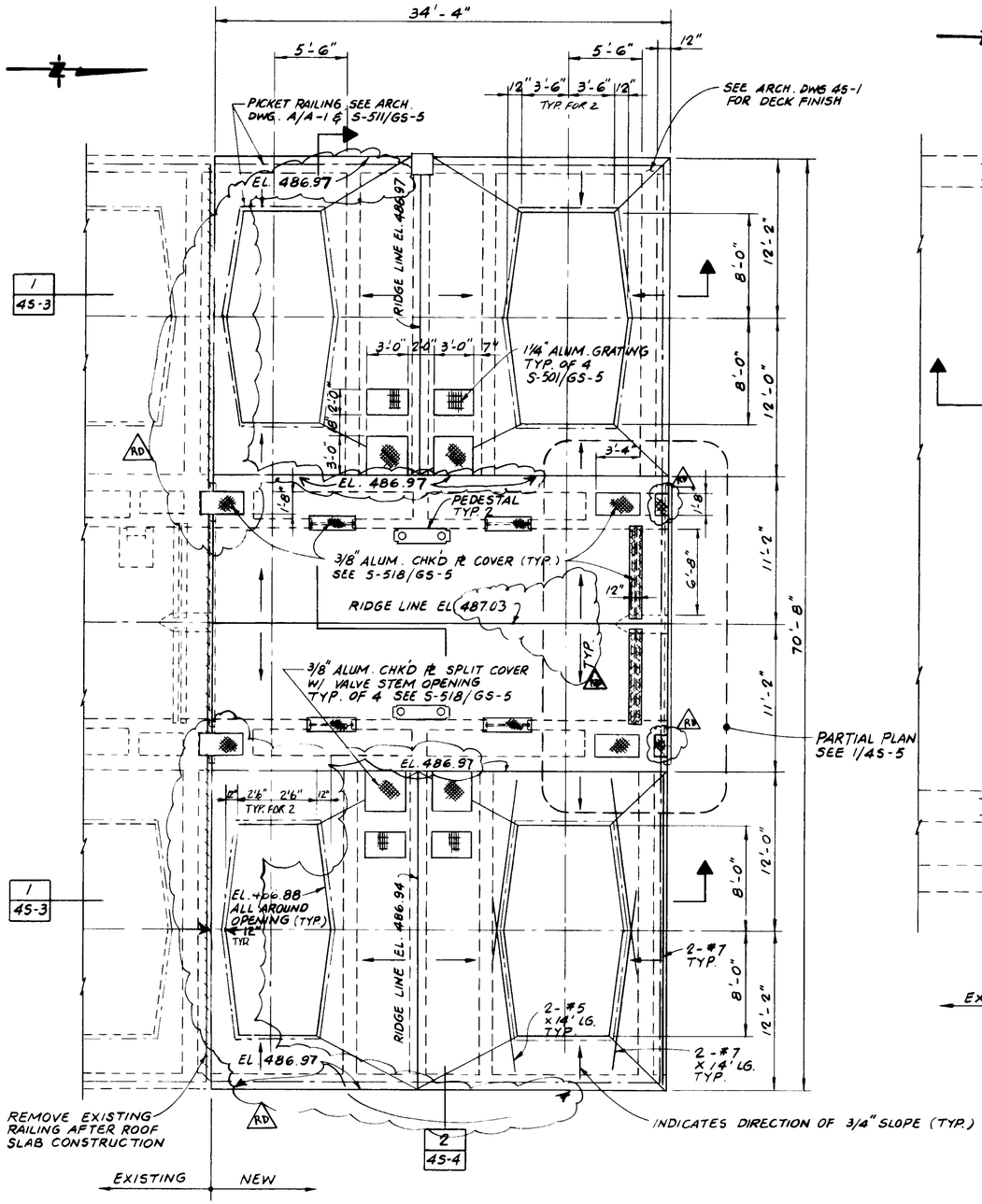

TOP PLAN

SCALE: 3/16" = 1'-0"

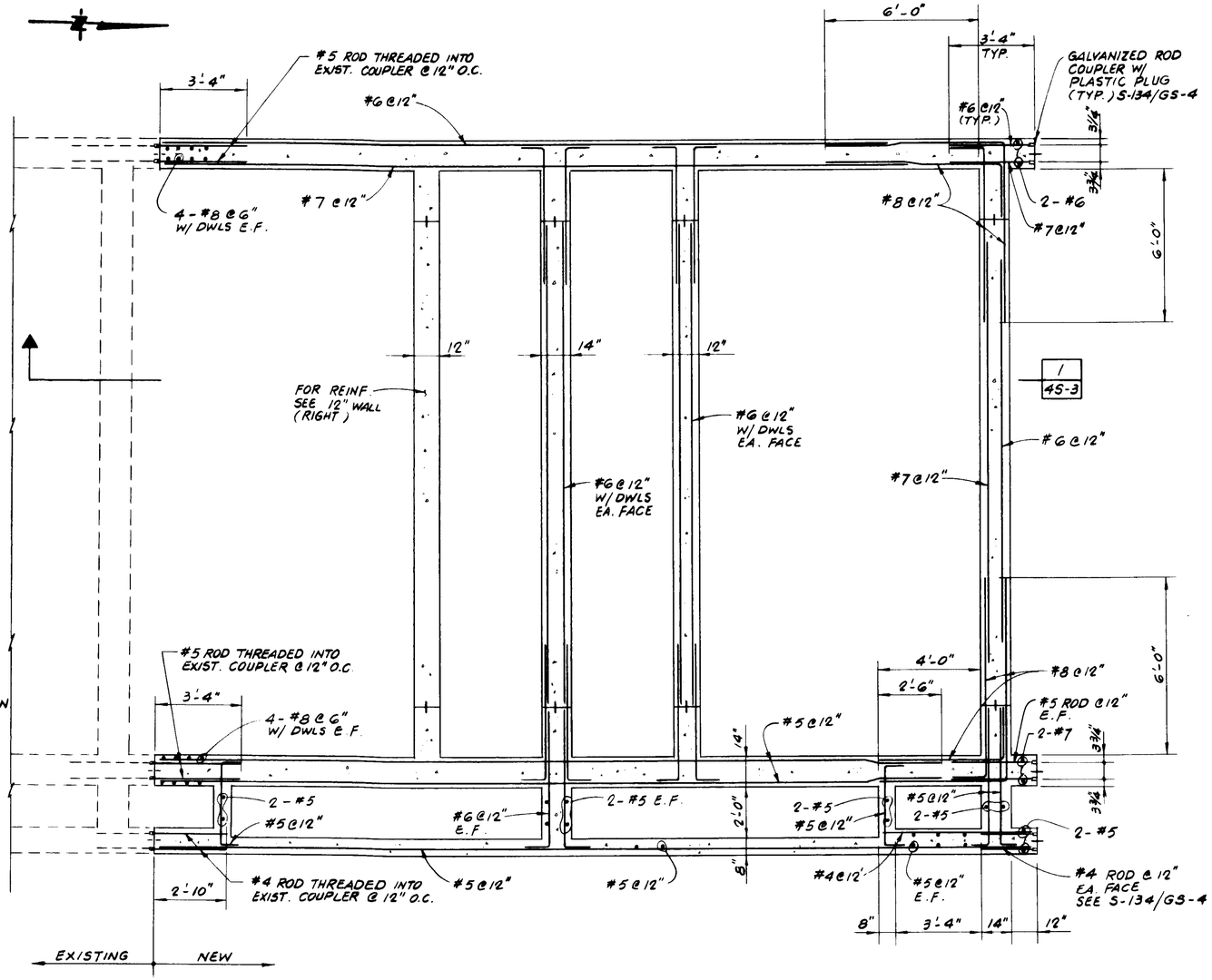

PARTIAL SECTIONAL PLAN AT EL. 475.00 SHOWING HORIZ. WALL REINF.

SCALE: 3/8" = 1'-0"

04730

NOTE: WHEN SIZE AND SPACING OF EXIST. COUPLERS ACTUALLY LOCATED IN FIELD IS LESS THAN SPECIFIED USE DETAIL A TO PROVIDE ADDITIONAL RODS AT REQUIRED SPACING.

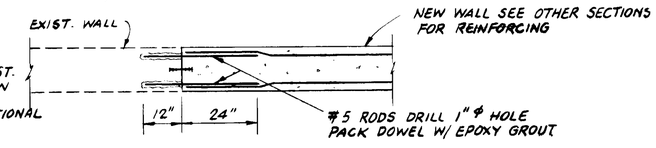

DETAIL A

NO SCALE

01-21-91 CONL

PROJECT RECORD DOCUMENT
C.W. Roen Const Co.
P.O. 4 Dublin, CA 94526
DATE 2-10-99 By RBL

REV	DATE	BY	DESCRIPTION
RD	2-10-99	RBL	AS-BUILT - ELEV + OPENINGS

SCALE: AS NOTED

WARNING: 0 1/2 1 — IF THIS BAR DOES NOT MEASURE 1" THEN DRAWING IS NOT TO SCALE.

DESIGNED / DRAWN / CHECKED

SUBMITTED: PROJECT ENGINEER — R.C.E. NO. 41019 — DATE 11/26/90

RECOMMENDED: JAMES M. MONTGOMERY CONSULTING ENGINEERS, INC. — R.C.E. NO. 33699 — DATE 11/26/90

JMM James M. Montgomery Consulting Engineers, Inc. Pasadena, California

APPROVED — DATE

APPROVED — DATE

FILTERS - TOP & SECTIONAL PLANS

SHEET 4S-2 OF 110 SHEETS

JOB NO. 870 0214 FILE ____ CC ____

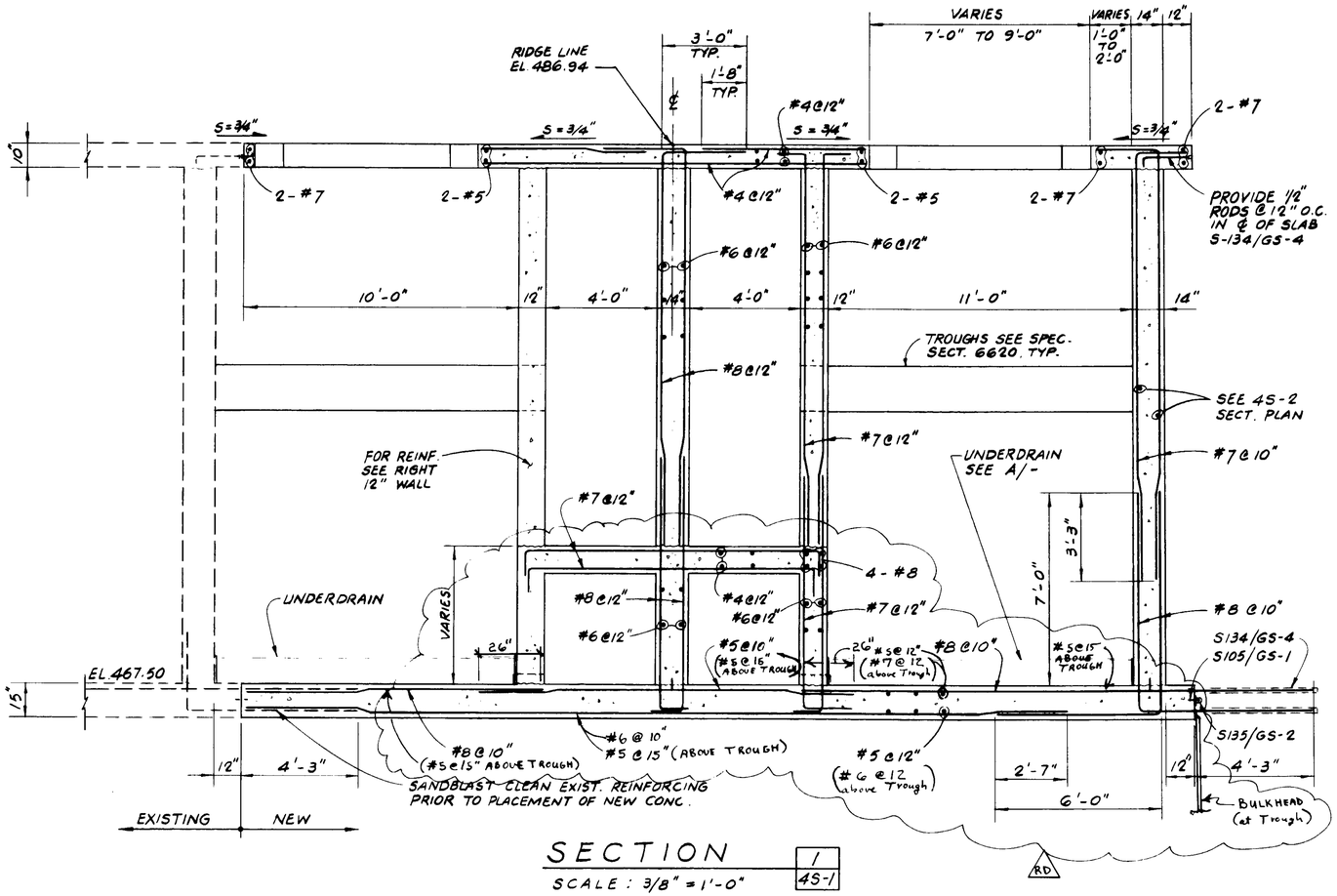

SECTION

SCALE: 3/8" = 1'-0"

1 / 4S-1

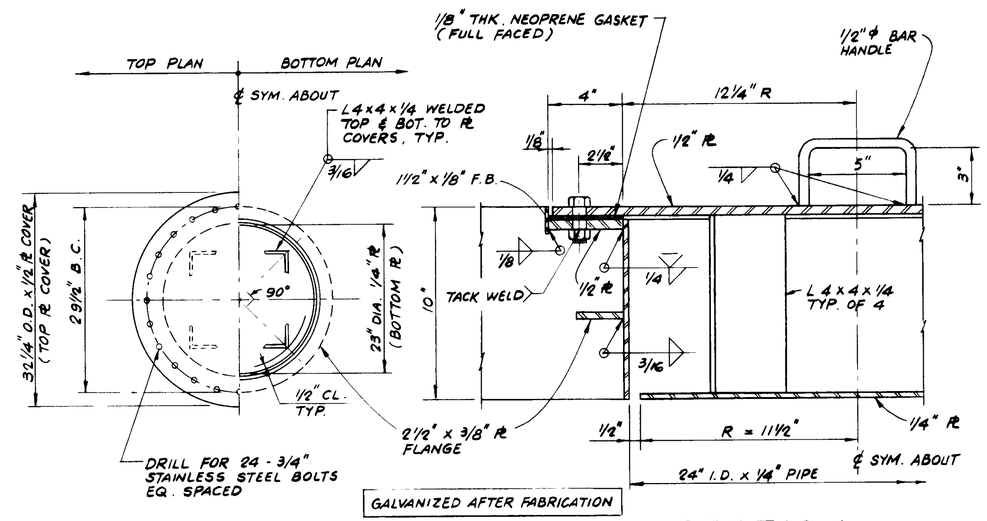

PLAN

SCALE: 1" = 1'-0"

SECTION

SCALE: 3" = 1'-0"

TYPICAL GULLET ACCESS MANHOLE DETAIL

X / 4S-1

NOTES:

1. PROVIDE A MINIMUM OF 2 U RODS PER ROW OF UNDERDRAIN.
2. ARRANGEMENT OF UNDERDRAINS PER MFR'S RECOMMENDATIONS.

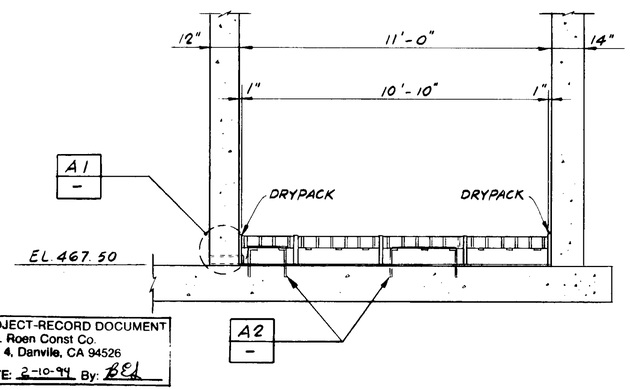

PROJECT-RECORD DOCUMENT
C.W. Roen Const Co.
P.O. 4, Danville, CA 94526
DATE: 2-10-94 By: BEL

UNDERDRAIN TYP. SECTION

SCALE: 3/8" = 1'-0"

A / -

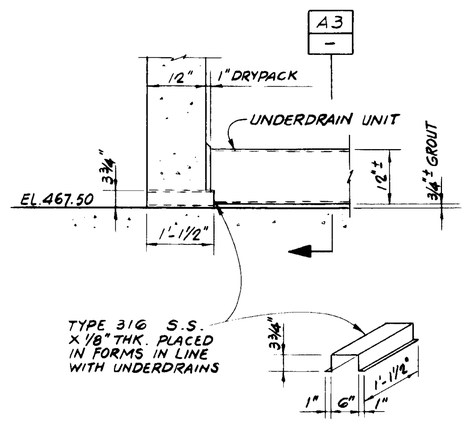

DETAIL

SCALE: 3/4" = 1'-0"

A1 / -

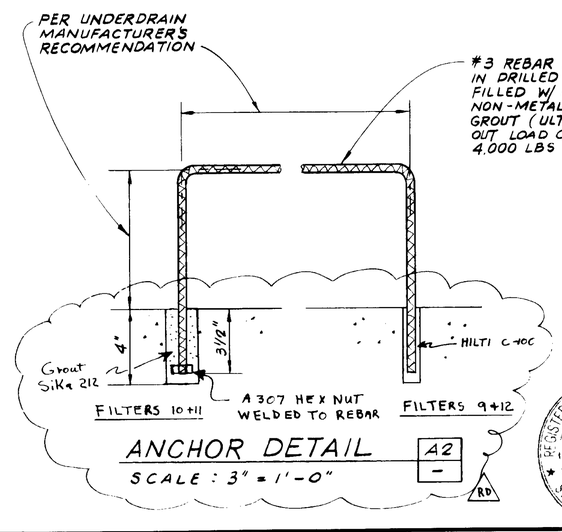

ANCHOR DETAIL

SCALE: 3" = 1'-0"

A2 / -

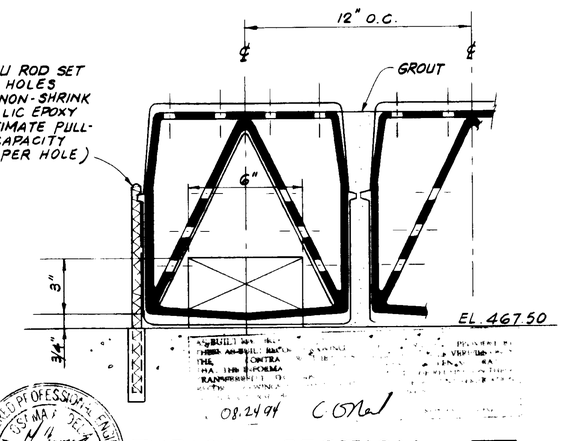

TYPICAL SECTION

SCALE: 3" = 1'-0"

A3 / -

04731

REV	DATE	BY	DESCRIPTION
RD	2-10-94	BEL	AS-BUILT - Rebar & Anchor Detail

SCALE: AS NOTED

WARNING: 0 1/2 1 — IF THIS BAR DOES NOT MEASURE 1" THEN DRAWING IS NOT TO SCALE.

DESIGNED / DRAWN / CHECKED

SUBMITTED: PROJECT ENGINEER — R.C.E. NO. 41019 — DATE 11/26/90

RECOMMENDED: JAMES M. MONTGOMERY CONSULTING ENGINEERS, INC. — R.C.E. NO. 33699 — DATE 11/26/90

JMM James M. Montgomery Consulting Engineers, Inc. — Pasadena, California

APPROVED: DISTRICT APPROVAL — DATE

APPROVED — DATE

LAS VIRGENES MWD / TRUNFO CSD
TAPIA WRF - REGIONAL FACILITIES EXPANSION IV
FILTRATION / DISINFECTION ADDITION

FILTERS - SECTIONS AND DETAILS

SHEET 4S-3 OF 110 SHEETS

JOB NO. ____ FILE ____ CC ____

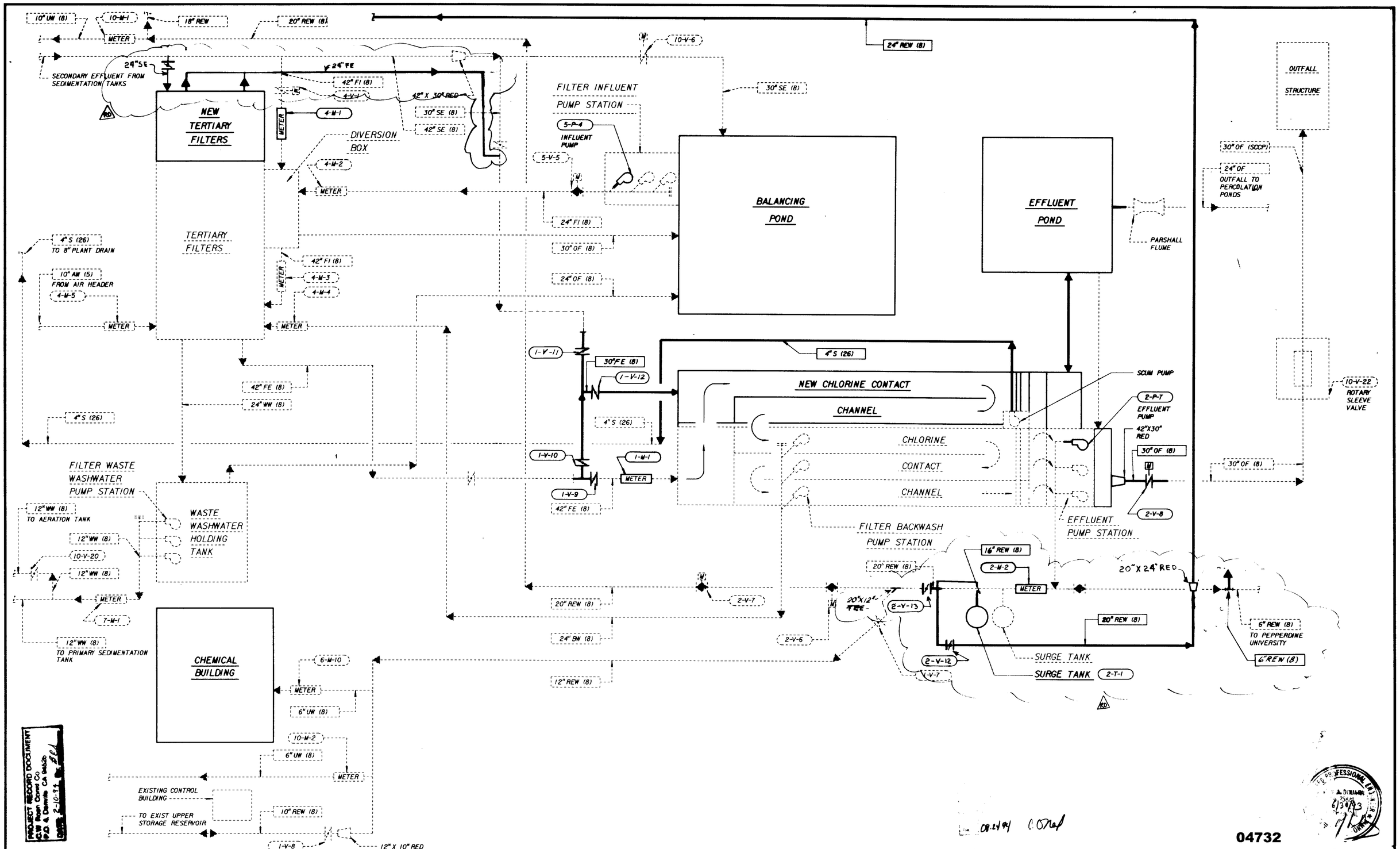

REV	DATE	BY	DESCRIPTION
RD	2-10-94	BR	AS-BUILT - BNK & REV

SCALE: NONE

WARNING: 0 1/2 1 — IF THIS BAR DOES NOT MEASURE 1" THEN DRAWING IS NOT TO SCALE.

DESIGNED
DRAWN
CHECKED S. Damaso

SUBMITTED
PROJECT ENGINEER — R. C. E. NO. 41019 — DATE 11/26/90
JAMES M. MONTGOMERY CONSULTING ENGINEERS, INC. — C. E. NO. 33699 — DATE 11/26/90

JMM James M. Montgomery Consulting Engineers, Inc.
Pasadena, California

APPROVED — DATE
APPROVED — DATE

LAS VIRGENES MWD / TRIUNFO CSD
TAPIA WRF - REGIONAL FACILITIES EXPANSION IV
FILTRATION / DISINFECTION ADDITION

SHEET [redacted] OF 110 SHEETS

JOB No. 870.023 FILE No. LVX MEC LVMLDGN1

FLUID ABBREVIATION	FUNCTION THIS LIST INCLUDES SOME LINES NOT USED IN THIS PROJECT	PIPING MATERIALS (SEE SCHEDULE AT RIGHT) EXPOSED PIPING (SEE NOTE 14) 2 IN. DIA. AND SMALLER	EXPOSED PIPING 2-1/2 IN. DIA. AND LARGER	BURIED PIPING (SEE NOTE 13) 2 IN. DIA. AND SMALLER	BURIED PIPING 2-1/2 IN. DIA. AND LARGER	FIELD TEST REQUIREMENTS (SEE NOTE 3 AND NOTE 4) MINIMUM TEST PRESSURE PSI	TEST MEDIUM	LEAKAGE ALLOWANCE (SEE NOTE 2)
A	AERATION	1,6,18	5,11,16,18	1,6,18	5,11,16,18	25	AIR	(A)(D)
AW	FILTER AIR WASH	16	16, 5,15	16	16, 5,15	25	AIR	(A)(D)
BD	BOTTOM DRAIN	–	26	–	26	50	WATER	(A)
BP	BYPASS	–	8	–	8	25	WATER	(A)
BW	FILTER BACKWASH	–	8	–	8	75	WATER	(A)
C	CONDENSATE	29 *	29 *	29 *	29 *	125	WATER	(A)
CAW	CHANNEL AGITATION WATER	16	16	16	16	25	WATER	(A)
CD	CHEMICAL DRAIN AND VENT	13,17,23	13,17,23	13,17,23	13,17,23	NOTE 7	–	–
CL	CHLORINE (GAS OR LIQUID STATE)	10	–	10	–	300	DRY AIR	(A)(D)
CLS	CHLORINE SOLUTION	16	16	16	16	125	WATER	(A)
CLV	CHLORINE GAS UNDER VACUUM	16	16	16	16	15 IN. Hg	VACUUM	(A)(E)
CN	CENTRATE	–	26	–	26	50	WATER	(A)
CS	CAUSTIC SODA	6	6	6	6	125	WATER	(A)
CSL	CIRCULATED SLUDGE	–	30	–	30	50	WATER	(A)
CV	CHLORINATOR VENT AND DETECTION LINE	16	16	16	16	NOTE 8	–	–
DCS	DEFOAMING CHEMICAL SOLUTION	16	16	16	16	125	WATER	(A)
DN	DECANT	–	26	–	26	50	WATER	(A)
DSL	DIGESTED SLUDGE	–	30	–	30	50	WATER	(A)
DW	DEMINERALIZED WATER	16,18	16,18	16,18	16,18	125	WATER	(A)
EE	ENGINE EXHAUST	14*	14*	14	14	NOTE 8	–	–
EWR	ENGINE COOLING WATER RETURN	1*	1*	1	1	125	WATER	(A)
EWS	ENGINE COOLING WATER SUPPLY	1*	1*	1	1	125	WATER	(A)
F	FROTH	30	30	30	30	50	WATER	(A)
FA	FOUL AIR	–	18	–	18	10	AIR	(A)(D)
FE	FINAL EFFLUENT	–	8	–	8	50	WATER	(A)
FI	FILTER INFLUENT	–	8	–	8	50	WATER	(A)
FOR	FUEL OIL RETURN	9	9	9	9	125	AIR	(A)(D)
FOS	FUEL OIL SUPPLY	9	9	9	9	125	AIR	(A)(D)
FS	FROTH SPRAY	2	2	2	2	125	WATER	(A)
FSP	FIRE PROTECTION SPRINKLER SYSTEM	NOTE 10	NOTE 10	NOTE 10	NOTE 10	NOTE 9	WATER	–
G	GRIT	–	26	–	26	50	WATER	(A)
H	HYPOCHLORITE	16	16	16	16	125	WATER	(A)
HR	HEATING WATER RETURN	1*	1*	1*	1*	125	WATER	(A)
HS	HEATING WATER SUPPLY	1*	1*	1*	1*	125	WATER	(A)
HWR	DOMESTIC HOT WATER RETURN	24*	2*	24*	2*	125	WATER	(A)
HWS	DOMESTIC HOT WATER SUPPLY	24*	2*	24*	2*	125	WATER	(A)
IA	INSTRUMENT AIR	24	2	24	2	125	AIR	(A)(D)
IE	INTERMEDIATE EFFLUENT	–	8	–	8,28	50	WATER	8(A) 28(B)
LA	LIQUID ALUM	16	16	16	16	125	WATER	(A)
LO	LUBE OIL	9	9	9	9	125	AIR	(A)(D)
LPG	LIQUEFIED PETROLEUM GAS	3	3	3	3	NOTE 7	AIR	–
LS	LIME SLURRY	NOTE 15	NOTE 15	NOTE 15	NOTE 15	NOTE 8	–	–
LSP	LANDSCAPING SPRINKLER SYSTEM	2,16	2,16	2,16	2,16	NOTE 7	–	–
MA	MURIATIC ACID	25	25	25	25	125	AIR	(A)(D)
ML	MIXED LIQUOR	2	2,8,26,28	2	2,8,26,28	50	WATER	2,8,26(A) 28(B)
NG	NATURAL GAS	9	9	9	9	NOTE 7	AIR	–
O	OZONE	15	15	15	15	50	AIR	(A)(D)
OF	OVERFLOW	–	8	–	8	25	WATER	(A)
PA	PLANT AIR	7	7	7	7	300	AIR	(A)(D)
PD	PLANT DRAIN	2	8,12	2	8,12,22,28	NOTE 6	WATER	2,8(A) 12,28(B) 22(C)
PEA	POLYMER - ANIONIC	16	16	16	16	125	WATER	(A)
PEC	POLYMER-CATIONIC	16	16	16	16	125	WATER	(A)
PEF	PRIMARY EFFLUENT	–	8, 26	–	8,26	25	WATER	(A)
PEN	POLYMER-NONIONIC	16	16	16	16	125	WATER	(A)
PI	PLANT INFLUENT	–	21, 26	–	21,26	NOTE 6	WATER	(B)
PO	PLANT OVERFLOW	2	8	2	8,28	NOTE 6	WATER	2, 8(A) 28(B)
PW	POTABLE WATER	2, 24	2	2,24	2,11,19	125	WATER	2,11,24(A) 19(B)
RAS	RETURN ACTIVATED SLUDGE	–	26	–	26	50	WATER	(A)
REW	RECLAIMED WATER	–	8	–	8	375	WATER	(A)
RSL	RAW SLUDGE	–	30	–	30	50	WATER	(A)
RW	RAW WATER	2	8	2	8,28	125	WATER	2,8(A) 28(B)
RWL	RAINWATER LEADER	4,12	4,12	12	12	NOTE 7	–	–
S	SCUM	–	30	–	30	50	WATER	(A)
SA	SAMPLE LINE (SEE LIST AT RIGHT)	16,18,24	–	16,18,24	–	125	WATER	(A)
SC	SPARE CHEMICAL	16	16	16	16	125	WATER	(A)
SD	SANITARY DRAIN AND VENT	4,12	12	12	12,21	NOTE 7	–	–
SDR	STORM DRAIN	–	8	–	22,28	NOTE 6	WATER	8(A) 28(B) 22(C)
SE	SECONDARY EFFLUENT	–	8, 26	–	8,26	50	WATER	(A)
SF	SLUDGE FILTRATE	–	26	–	26	50	WATER	(A)
SG	SLUDGE GAS	31	31	31	31	125	AIR	(A)(D)
SI	SODIUM SILICATE	6, 16	6, 16	6,16	6,16	125	WATER	(A)
SN	SUPERNATANT	–	26	–	26	50	WATER	(A)
SO	SULFUR DIOXIDE (GAS OR LIQUID STATE)	10	–	10	–	300	DRY AIR	(A)(D)
SOA	SULFURIC ACID	25	25	–	–	125	AIR	(A)(D)
SOS	SULFUR DIOXIDE SOLUTION	16	16	16	16	125	WATER	(A)
SOV	SULFUR DIOXIDE GAS UNDER VACUUM	16	16	16	16	15 IN. Hg	VACUUM	(A)(E)
SPD	SUMP PUMP DISCHARGE	2	26	2	26	50	WATER	(A)
SS	SANITARY SEWER	–	12	–	12,21	NOTE 7	–	–
ST	STEAM (LOW PRESSURE TO 10 PSI)	29*	29*	29*	29*	125	WATER	(A)
SU	STRUCTURE UNDERDRAIN	–	–	–	20		NO TEST REQ'D	
SUC	STRUCTURE UNDERDRAIN COLLECTOR	–	12	–	12,21	NOTE 6	WATER	(C)
SW	FILTER SURFACE WASHWATER	14,16,18	8,14,15,16,18	2,16,18	2,8,15,16,18	125	WATER	(A)
TPR	THICKENER PRESSURIZED RECYCLE	–	26	–	26	50	WATER	(A)
TS	THICKENER SUPNATANT	–	26	–	26	50	WATER	(A)
TSL	THICKENED SLUDGE	–	30	–	30	50	WATER	(A)
TSO	THICKENER SUPNATANT OVERFLOW	–	26	–	26	50	WATER	(A)
UW	UTILITY WATER (NON-POTABLE WATER)	2,24	2,11	2,24	2,8,11,19	NOTE 17	WATER	2,8,11,24(A)19(B)
V	VACUUM	24	2	24	2	15 IN. Hg	VACUUM	(A)(E)
WAS	WASTE ACTIVATED SLUDGE	–	26	–	26	50	WATER	(A)
WLO	WASTE LUBE OIL	9	9	9	9	50	AIR	(A)(D)
WW	FILTER WASTE WASHWATER	–	8	–	8	NOTE 6	WATER	(A)

PROJECT RECORD DOCUMENT
G.W. Kaan Const Co.
P.O. 4, Danville, CA 94526
DATE 2-10-94 By [illegible]

PIPING MATERIAL SCHEDULE (SEE NOTE 4)

GROUP NO.	PIPE (SEE NOTE 13)	FITTINGS	VALVES,6 INCHES AND SMALLER (SEE NOTE 1,NOTE 11 AND NOTE 16)
1	STEEL, ASTM A120, SCHEDULE 40, BLACK WELDED.	2-1/2 INCH AND SMALLER, MALLEABLE IRON, ANSI B16.3, THREADED, BANDED, BLACK, 150 PSI OR STEEL, ANSI B16.9, BUTT-WELDED. 3 INCH AND LARGER, CAST IRON, ANSI B16.1, 125 PSI FLANGED OR MECHANICAL COUPLINGS.	BRONZE, THREADED, GATE, CRANE NO.428 UB OR STOCKHAM B-105, GLOBE, CRANE NO.14-1/2P OR STOCKHAM B-29, CHECK, CRANE NO.37 OR STOCKHAM B-319, STEEL, LUBRICATED PLUG, ROCKWELL FIG. 142 OR 143 OR POWELL FIG 2200 OR 2201, ECCENTRIC PLUG, DEZURIK SERIES 118 OR KEYSTONE 1512, BALL, JENKINS NO.900T OR JAMESBURY FIG.351
2	STEEL, ASTM A120, SCHEDULE 40 WELDED, GALVANIZED.	2-1/2 INCH AND SMALLER, MALLEABLE IRON, ANSI B16.3, THREADED, BANDED, GALVANIZED 150 PSI. 3 INCH AND LARGER, CAST IRON, ANSI B16.1, 125 PSI FLANGED OR MECHANICAL COUPLINGS.	2-1/2 INCH AND SMALLER, ECCENTRIC PLUG, SYNTHETIC RUBBER FACED, DEZURIK 118S OR HOMESTEAD 1512, BALL, JENKINS NO.900T OR JAMESBURY FIG.351 3 INCH AND LARGER, ECCENTRIC PLUG, SYNTHETIC RUBBER FACED, DEZURIK 118F OR KEYSTONE 1522 OR 1532 EWG, GATE, AWWA C500, BUTTERFLY, AWWA, FLANGED.
3	STEEL, ASTM A106 OR A53, SCHEDULE 80, SEAMLESS, BLACK.	FORGED STEEL, ANSI B16.11, SOCKET WELDED OR THREADED, BLACK, 2000 PSI, OR STEEL, ANSI B16.9, BUTT-WELDED, SCHEDULE 80.	CAST IRON, LUBRICATED PLUG, ROCKWELL FIG. 214 OR 305 OR POWELL FIG. 2210 OR 2211.
4	SAME AS GROUP NO. 1	CAST IRON, ANSI B16.12, THREADED, DRAINAGE PATTERN.	——
5	WELDED STEEL, AWWA C200, UNLINED.	WELDED STEEL, FABRICATED, AWWA C200, UNLINED.	AS INDICATED ON DRAWINGS
6	STEEL, ASTM A106, OR A53, SCHEDULE 40, SEAMLESS, BLACK.	STEEL, ANSI B16.5, BUTT-WELDED, CAST IRON, ANSI B16.1, 125 PSI, FLANGED, FORGED STEEL, SOCKET WELDED, ANSI B16.11, 2000 PSI OR STEEL, ANSI B16.5, 150 PSI FLANGED.	CAST IRON, FLANGED, LUBRICATED PLUG ROCKWELL FIG 143 OR POWELL FIG 2201.
7	SAME AS GROUP NO. 2.	MALLEABLE IRON, ANSI B16.3, THREADED, BANDED, GALVANIZED, 300 PSI.	BRONZE THREADED, GLOBE, CRANE NO.212P OR 229C OR STOCKHAM B-62 OR B-32. BALL, JENKINS NO.900T OR JAMESBURY FIG.351 CHECK, CRANE NO.27 OR STOCKHAM B-322.
8	WELDED STEEL, AWWA C200.	WELDED STEEL, AWWA C200, FABRICATED.	AS INDICATED ON DRAWINGS.
9	SAME AS GROUP NO. 1.	2-1/2 INCH AND SMALLER, MALLEABLE IRON, ANSI B16.3, THREADED, BANDED, BLACK, 150 PSI. 3 INCH AND LARGER, STEEL, ANSI B16.9, BUTT-WELDED	ECCENTRIC PLUG, DEZURIK SERIES 118 OR KEYSTONE 1512, CHECK, CRANE NO.336E OR WALWORTH NO.904 OR POWELL FIG 668Y. BALL, JENKINS NO.900T OR JAMESBURY FIG.351.
10	SAME AS GROUP NO. 3.	1-1/4 INCH AND SMALLER, FORGED STEEL, ANSI B16.11, THREADED OR SOCKET WELDED, BLACK, 3000 PSI, WITH FLANGED AMMONIA UNIONS. 1-1/2 INCH AND LARGER, STEEL, ANSI B16.9, BUTT-WELDED OR FLANGED, SCHEDULE 80	SEMI-PLUG AND YOKE TYPE OR BALL FOR CHLORINE SERVICE. FORGED CARBON STEEL
11	DUCTILE IRON, ANSI A21.51, (AWWA C151) OR CAST IRON ANSI A21.6, 150 PSI, BELL AND SPIGOT, MECHANICAL JOINTS, MECHANICAL COUPLINGS, OR 125 PSI FLANGED (TYPICAL SERVICE - WATER LINES)	DUCTILE IRON OR CAST IRON, ANSI A210, OR AWWA C110, BELL AND SPIGOT, MECHANICAL COUPLINGS, FLANGED OR MECHANICAL JOINTS, 250 PSI, (PRESSURE RATING) 12 INCHES AND SMALLER, 150 PSI, (PRESSURE RATING) 14 INCHES AND LARGER, WITH 125 PSI ANSI B16.1 FLANGES.	GATE, AWWA C500, 'O' RING SEALS, MECHANICAL JOINTS ENDS. MUELLER A-2380-20, OR EDDY-IOWA (CLOW) F-5155. BUTTERFLY, AWWA, ECCENTRIC PLUG, DEZURIK SERIES 118 OR KEYSTONE 1512, OR BALL, PRATT OR W-K-M.
12	CAST IRON SOIL, ANSI/ASTM A-74, SERVICE WEIGHT, BELL AND SPIGOT OR HUBLESS. AT THE OPTION OF THE CONTRACTOR, DUCTILE IRON (GROUP NO.11) MAY BE SUBSTITUTED	CAST IRON SOIL, ANSI/ASTM A-74, SERVICE WEIGHT, BELL AND SPIGOT OR HUBLESS. AT THE OPTION OF THE CONTRACTOR, DUCTILE IRON (GROUP NO.11) MAY BE SUBSTITUTED.	AS INDICATED ON DRAWINGS.
13	CORROSION RESISTANT (HIGH SILICON CONTENT) CAST IRON, SERVICE WEIGHT, BELL AND SPIGOT OR HUBLESS.	CORROSION RESISTANT (HIGH SILICON CONTENT) CAST IRON, SERVICE WEIGHT, BELL AND SPIGOT OR HUBLESS.	——
14	STAINLESS STEEL, TYPE 316, ASTM A312, SCHEDULE 40S.	STAINLESS STEEL, TYPE 316 ANSI B16.3, SCREWED, 150 PSI, ANSI B16.9, BUTT-WELDED, SCHEDULE 40S, OR 150 PSI FLANGED.	STAINLESS STEEL, BALL, FLANGED, LADISH NO.4202, OR JAMESBURY TYPE A/D9SOK. CHECK, LADISH, NO.5212 OR STOCKHAM FIG.15 SF 316 OR AS SHOWN ON DRAWINGS.
15	STAINLESS STEEL, TYPE 316, ASTM A312, SCHEDULE 10S.	STAINLESS STEEL, TYPE 316 ANSI B16.9 BUTT-WELDED SCHEDULE 10S OR 150 PSI FLANGED.	STAINLESS STEEL, AS INDICATED ON DRAWINGS.
16	POLYVINYL CHLORIDE, SCHEDULE 80, NORMAL IMPACT, ASTM D1785	POLYVINYL CHLORIDE, SCHEDULE 80, NORMAL IMPACT, SOCKET SOLVENT WELD JOINTS, ASTM D2467.	POLYVINYL CHLORIDE, BALL, DIAPHRAGM, BUTTERFLY, BALL OR LIFT CHECK, CHEMTROL, HILLS-MCCANNA OR GSR-R.G. SLOAN CO.
17	POLYPROPYLENE, ASTM D2146, SCHEDULE 40, WITH HEAT FUSED JOINTS.	POLYPROPYLENE, SCHEDULE 40, DRAINAGE TYPE WITH HEAT FUSED SOCKET JOINTS.	——
18	FIBERGLASS REINFORCED PLASTIC, ASTM D2996, FILAMENT-WOUND, SOCKET AND SPIGOT ENDS, ADHESIVE BONDED.	FIBERGLASS REINFORCED PLASTIC, FILAMENT-WOUND, SOCKET ENDS, ADHESIVE BONDED, OR FIBERGLASS FLANGED.	PLASTIC LINED, FLANGED, FLANGES TO MATCH 150 PSI ANSI B16.5 DIMENSIONS, OR AS INDICATED ON DRAWINGS.
19	POLYVINYL CHLORIDE PRESSURE PIPE ASTM D2241 WITH BELL AND SPIGOT JOINTS.	CAST IRON, 150 PSI, FOR POLYVINYL CHLORIDE PIPE, AWWA C110 CEMENT MORTAR LINED, AWWA C104.	SAME AS GROUP NO. 11.
20	VITRIFIED CLAY, PERFORATED, ASTM C700, EXTRA STRENGTH, FLEXIBLE COMPRESSION JOINTS FOR BELL AND SPIGOT PIPE OR PLAIN END WITH MECHANICAL COMPRESSION JOINTS	VITRIFIED CLAY, ASTM C700, FLEXIBLE JOINTS FOR BELL AND SPIGOT PIPE OR PLAIN END WITH MECHANICAL COMPRESSION JOINTS.	——
21	VITRIFIED CLAY, ASTM C700, EXTRA STRENGTH, FLEXIBLE COMPRESSION JOINTS FOR BELL AND SPIGOT PIPE OR PLAIN END WITH MECHANICAL COMPRESSION JOINTS	VITRIFIED CLAY, ASTM C700, FLEXIBLE JOINTS FOR BELL AND SPIGOT PIPE OR PLAIN END WITH MECHANICAL COMPRESSION JOINTS.	——
22	REINFORCED CONCRETE, ASTM C76, TONGUE AND GROOVED JOINTS. (TYPICAL SERVICE-CULVERTS)	SAME AS GROUP NO. 8	——
23	TEMPERED GLASS, (ARMORED, WHERE BURIED), ANSI/ASTM C599	TEMPERED GLASS DRAINAGE TYPE WITH COMPRESSION COUPLINGS AND TEFLON JOINTS. ANSI/ASTM C599 (ARMORED WHERE BURIED)	——
24	COPPER, ASTM B88, TYPE K, SOFT TEMPERED WHERE BURIED, HARD TEMPERED WHERE EXPOSED.	WROUGHT COPPER OR CAST BRONZE, ANSI B16.22, SOLDER JOINT, 150 PSI. OR COMPRESSION FITTINGS. (FOR OXYGEN PIPING USE SILVER SOLDER. FOR COMPRESSED AIR PIPING USE 95-5 TIN-ANTIMONY SOLDER).	BRONZE, SOLDER JOINT, GLOBE, CRANE NO.1310 OR STOCKHAM B-14. CHECK, CRANE NO.1342 OR 36, OR STOCKHAM B-309 OR B-345. GATE, CRANE NO.1320 OR 428, OR STOCKHAM B-104 OR B-105.
25	STEEL, ASTM A106 OR A53, SCHEDULE 40, SEAMLESS, BLACK, SARAN OR POLYPROPYLENE-LINED	STEEL, ANSI B16.5, 150 PSI FLANGED, SARAN OR POLYPROPYLENE-LINED.	CAST STEEL PLUG, DIAPHRAGM OR CHECK, 150 PSI FLANGED. SARAN OR POLYPROPYLENE-LINED.
26	SAME AS GROUP NO. 11 (TYPICAL SERVICE - SLUDGE AND SEWAGE LINES)	SAME AS GROUP NO. 11.	ECCENTRIC PLUG, SYNTHETIC RUBBER FACED, DEZURIK 118F OR KEYSTONE 1522, SWING TYPE CHECK, CRANE NO.383 OR POWELL FIG.559. BALL, PRATT OR W-K-M.
27	POLYVINYL CHLORIDE GRAVITY SEWER PIPE, ASTM D3034, BELL AND SPIGOT.	POLYVINYL CHLORIDE, ANSI/ASTM D3034, BELL AND/OR SPIGOT.	——
28	REINFORCED CONCRETE, AWWA C302, CLASS-SEE DRAWINGS. (TYPICAL SERVICE - PRESSURE PIPELINES)	SAME AS GROUP NO. 8.	AS INDICATED ON DRAWINGS.
29	SAME GROUP NO. 1.	2 INCH AND SMALLER, MALLEABLE IRON, ANSI B16.3, THREADED, BANDED, BLACK, 150 PSI. 2-1/2 INCH AND LARGER, STEEL ANSI B16.9, BUTT-WELDED.	SAME AS GROUP NO. 1, EXCEPT LUBRICATED PLUG SHALL BE ROCKWELL FIG.114 OR 115, OR POWELL FIG.2202 OR 2203.
30	SAME AS GROUP NO. 11, GLASS-LINED OR STEEL ASTM A120, SCHEDULE 40, GLASS-LINED	SAME AS GROUP NO. 11, GLASS-LINED OR STEEL, ANSI B16.9, SCHEDULE 40, GROOVED WITH MECHANICAL COUPLINGS, GLASS-LINED.	SAME AS GROUP NO. 26.
31	2-1/2 INCH AND SMALLER, STEEL, ASTM A106 OR A53, SCHEDULE 80, SEAMLESS, BLACK. 3 INCH AND LARGER DUCTILE IRON, ANSI A21.51 (AWWA C151) OR CAST IRON ANSI A21.6 OR A21.8 MECHANICAL COUPLINGS OR 125 PSI FLANGED.	2-1/2 INCH AND SMALLER, FORGED STEEL, ANSI B16.11, SOCKET-WELDED OR THREADED, BLACK, 2000 PSI, OR STEEL ANSI B16.9, BUTT-WELDED SCHEDULE 80. 3 INCH AND LARGER, DUCTILE IRON OR CAST IRON, ANSI A210 OR AWWA C110, MEHCANICAL COUPLING OR 125 PSI FLANGED.	CAST IRON, LUBRICATED PLUG, ROCKWELL FIG.142 OR 143, OR POWELL FIG.2200 OR 2201.

AS-BUILT RECORD
THESE AS-BUILT DRAWINGS WERE PREPARED BY THE CONTRACTOR AND THE INFORMATION SHOWN ON THESE DRAWINGS WAS TRANSFERRED TO THIS SHEET FROM AS-BUILT RECORD DRAWINGS PROVIDED BY THE CONTRACTOR. THE ACCURACY OF THIS INFORMATION IS THE RESPONSIBILITY OF THE CONTRACTOR.
DATE 08-24-94 C. Grad

LIST OF SAMPLE LINES

PIPE DESIGNATION	SAMPLE POINT

TYPICAL PIPE DESIGNATION:

2" UW (24)

- 2" — PIPE DIAMETER
- UW — FLUID ABBREVIATION
- (24) — MATERIAL GROUP NUMBER (SEE NOTE 12)

NOTES

NOTE 1
PROPRIETARY NAMES HAVE BEEN QUOTED FOR IDENTIFICATION PURPOSES ONLY. SUBSTITUTIONS WILL BE PERMITTED SUBJECT TO PROVISIONS OF THE SPECIFICATIONS.

NOTE 2
LEAKAGE ALLOWANCE IS AS FOLLOWS:
(A) PIPES SO DESIGNATED SHALL SHOW ZERO LEAKAGE.
(B) PIPES SO DESIGNATED SHALL SHOW ZERO LEAKAGE FOR UNBURIED PIPE AND NOT MORE THAN 0.002 GALLON PER HOUR PER INCH DIAMETER PER 100 FEET OF BURIED PIPE.
(C) PIPES SO DESIGNATED SHALL NOT SHOW A LEAKAGE OF MORE THAN 0.15 GALLON PER HOUR PER INCH OF DIAMETER PER 100 FEET OF PIPE.
(D) PIPES SO DESIGNATED SHALL NOT SHOW A LOSS OF PRESSURE OF MORE THAN 5 PERCENT.
(E) PIPES SO DESIGNATED SHALL NOT SHOW A LOSS OF VACUUM OF MORE THAN 4 INCHES MERCURY COLUMN.

NOTE 3
FOR FIELD TEST PROCEDURES AND ADDITIONAL TEST REQUIREMENTS, SEE PIPING SECTION OF SPECIFICATIONS.

NOTE 4
ANY DEVIATION FROM THE PIPING MATERIALS OR FIELD TEST REQUIREMENTS SHOWN WILL BE NOTED IN THE SPECIFICATIONS OR ON THE DRAWINGS.

NOTE 5
PIPING GROUP NUMBER SHOWN THUS * SHALL BE INSULATED. SEE PIPING SECTION OF SPECIFICATIONS FOR INSULATING MATERIALS.

NOTE 6
STATIC WATER TEST WITH SURFACE 5 FEET ABOVE HIGH POINT OF PIPE.

NOTE 7
INSPECTION AND TESTING SHALL BE IN ACCORDANCE WITH APPLICABLE PLUMBING CODE.

NOTE 8
NO APPARENT LEAKS UNDER NORMAL OPERATING CONDITIONS.

NOTE 9
INSPECTION AND TESTING SHALL BE IN ACCORDANCE WITH APPLICABLE NATIONAL FIRE PROTECTION ASSOCIATION STANDARDS.

NOTE 10
PIPING MATERIALS SHALL BE IN ACCORDANCE WITH NATIONAL FIRE PROTECTION ASSOCIATION STANDARDS.

NOTE 11
FOR VALVES 8 INCHES AND LARGER SEE VALVE SCHEDULE. FOR SPECIAL VALVES SEE SPECIFICATIONS.

NOTE 12
CHANGE IN PIPING MATERIAL GROUP NUMBER IS INDICATED THUS: ——◆

NOTE 13
FOR PIPE LINING AND COATING, SEE SPECIFICATIONS.

NOTE 14
EXPOSED PIPING SHALL BE PAINTED IN ACCORDANCE WITH SPECIFICATIONS. COLORS TO BE SELECTED BY ENGINEER.

NOTE 15
PIPING MATERIAL SHALL BE NON-ABRASIVE FLEXIBLE RUBBER HOSE AND QUICK CONNECTION COUPLINGS WITH GROUP NO. 1 AT EQUIPMENT.

NOTE 16
VALVES 2-1/2 INCH AND SMALLER MAY HAVE SCREWED ENDS. VALVES 3 INCH AND LARGER SHALL HAVE FLANGED ENDS. UNLESS OTHERWISE SHOWN OR SPECIFIED.

NOTE 17
125 PSI EXCEPT THE REW LINE WHICH SHALL BE 375 PSI.

REGISTERED PROFESSIONAL ENGINEER
SAMI A. DOUARA
No. 25826
Exp. 6/30/93
MECHANICAL
STATE OF CALIFORNIA

04733

REV	DATE	BY	DESCRIPTION

SCALE: NONE

WARNING
0 1/2 1
IF THIS BAR DOES NOT MEASURE 1" THEN DRAWING IS NOT TO SCALE.

DESIGNED [illegible]
DRAWN M. Hassanzadeh
CHECKED S. Douara

SUBMITTED
George M. Pacer 41019 R.C.E. NO. 11/26/90 DATE
PROJECT ENGINEER
[illegible] 33699 R.C.E. NO. 11/26/90 DATE
CONSULTING ENGINEERS, INC.

James M. Montgomery, Inc.
Consulting Engineers, Inc.
Pasadena, California

APPROVED
DISTRICT APPROVAL ON COVER SHEET
DATE
APPROVED
DATE

LAS VIRGENES MWD / TRUNFO CSD
TAPIA WRF - REGIONAL FACILITIES EXPANSION IV
FILTRATION / DISINFECTION ADDITION
[redacted]

SHEET [redacted]
OF [redacted] SHEETS

JOB No. 870.018 FILE No. ZFB2E300.72WWPIPS1.PRF
JOB No. FILE No.

VALVE SCHEDULE (8" AND LARGER)

VALVE NO.	LOCATION	SERVICE	TYPE	SIZE INCH	CLASS PSI	OPERATOR	REMARKS
1-V-9	West of Chlorine Contact Channel	Filter Effluent	Butterfly	42	125	Square Nut	Flanged, Buried
1-V-10	West of Chlorine Contact Channel	Filter Effluent	Butterfly	30	125	Square Nut	Flanged, Buried
1-V-11	West of Chlorine Contact Channel	Filter Effluent	Butterfly	30	125	Square Nut	Flanged, Buried
1-V-12	West of Chlorine Contact Channel	Filter Effluent	Butterfly	30	125	Square Nut	Flanged, Buried
2-V-8	Effluent Box	Plant Effluent	Butterfly	30	125	Electric w/Ext.	Flanged, Buried
2-V-9(1)	Effluent Pump Station	Reclaimed Water	Pump Control	14	250 or 300	Hydraulic	Flanged
2-V-10	Effluent Pump Station	Reclaimed Water	Butterfly	16	250 or 300	Worm Gear	Lug Type
2-V-11	Surge Tank	Reclaimed Water	Butterfly	16	250 or 300	Worm Gear	Lug Type
2-V-12	Effluent Pump Station	Reclaimed Water	Butterfly	20	250 or 300		Flanged, Buried
2-V-13	20" REW	Reclaimed Water	Butterfly	20	300		Flanged, Buried
4-V-901	Filter No. 9	Influent	Butterfly	18	125	Electric	w/Extn. Bonnet
4-V-902	Filter No. 9	Effluent	Butterfly	14	125	Electric	Modulating
4-V-903	Filter No. 9	Backwash	Butterfly	24	125	Electric	—
4-V-904	Filter No. 9	Air Scour	Butterfly	8	125	Electric	—
4-V-905	Filter No. 9	WWW Drain	Butterfly	18	125	Electric	w/Extn. Buried Bonnet
4-V-1001 thru 4-V-1005	Filter No. 10	—	Butterfly	—	—	Electric	Same as Filter No. 9
4-V-1101 thru 4-V-1105	Filter No. 11	—	Butterfly	—	—	Electric	Same as Filter No. 9
4-V-1201 thru 4-V-1205	Filter No. 12	—	Butterfly	—	—	Electric	Same as Filter No. 9
5-V-6	Filter Influent Pump Station	Filter Influent	Silent Check	18	125	In-line Spring	5-P-4 Discharge
5-V-7	Filter Influent Pump Station	Filter Influent	Butterfly	18	125	Manual Gear	5-P-4 Discharge

Note: (1) Existing valves 2-V-1 & 2-V-2 shall be replaced with pump control valve model as specified in specification section 15115.

MISCELLANEOUS MECHANICAL EQUIPMENT SCHEDULE

EQUIP. NO.	LOCATION	SERVICE	TYPE	HP OR ELEC SERVICE	CAPACITY	REMARKS
1-ME-3	Chlorine Contact Channel Inlet Structure	Filtered Effluent	Chlorine Injection & Reactor System	20 HP (1-P-7)	2,000 lbs/day	
1-ME-4	Chlorine Contact Channel	Skimming	Scum Collector	—	—	—
2-ME-8	Effluent Pump Station	Chlorinated Effluent	Sulfur Dioxide Induction System	7.5 HP	4,000 lbs/day	
2-ME-9	Effluent Pump Station	Dechlorinated Effluent	Chlorine Residual Analyzer	—	-0.5 to +0.5	
4-ME-12	Filter Pipe Gallery	Filter No. 9 Effluent	Turbidimeter	60 Watts	—	—
4-ME-13	Filter Pipe Gallery	Filter No. 10 Effluent	Turbidimeter	60 Watts	—	—
4-ME-14	Filter Pipe Gallery	Filter No. 11 Effluent	Turbidimeter	60 Watts	—	—
4-ME-15	Filter Pipe Gallery	Filter No. 12 Effluent	Turbidimeter	60 Watts	—	—
6-ME-24	Chlorine Storage Bldg.	Heating	Electric Unit Heater	7.5 KW	25,000 BTU/Hr	w/thermostat
6-ME-25	Chlorine Storage Bldg.	Heating	Electric Unit Heater	7.5 KW	25,000 BTU/Hr	w/thermostat
6-ME-26	Sulfur Dioxide Storage Bldg.	Heating	Electric Unit Heater	7.5 KW	25,000 BTU/Hr	w/thermostat
6-ME-27	Sulfur Dioxide Storage Bldg.	Heating	Electric Unit Heater	7.5 KW	25,000 BTU/Hr	w/thermostat

FAN SCHEDULE

FAN NO.	LOCATION	SERVICE	TYPE	CFM	SP (INCH)	HP	REMARKS
2-F-1	Effluent Pump Bldg.	Ventilation	Propeller	19,550	3/4	5	
2-F-2	Effluent Pump Bldg.	Ventilation	Propeller	19,550	3/4	5	
6-F-5	Chlorine Storage Bldg.	Ventilation	Propeller	2,600	1/2	3/4	Epoxy Coated
6-F-6	Sulfur Dioxide Storage Bldg.	Ventilation	Propeller	1,800	1/2	3/4	Epoxy Coated

PUMP SCHEDULE

EQUIP NO.	LOCATION	SERVICE	FLOW GPM	TDH FT	HP MIN	TYPE AND REMARKS
1-P-7	Chlorine Contact Channel Inlet Structure	Chlorine Injection	1,200	33	20	Submersible Type
2-P-4	Effluent Pump Station	Sample	25	60	1	Regenerative Turbine
2-P-7	Effluent Pump Station	Final Effluent	6,250 at 4,860 at	440 550	900	Vertical Turbine
5-P-4	Filter Influent Pump Station	Filter Influent	6,100	32	75	Vertical Mixed Flow w/suction Strainer
11-P-1	Drainage Pump Station	Groundwater	550	40	10	Submersible Type
11-P-2	Drainage Pump Station	Groundwater	550	40	10	Submersible Type

GATE SCHEDULE

GATE NO.	LOCATION	SERVICE	SIZE INCH (W X H)	SEATING HEAD FT	UNSEATING HEAD FT	OPERATOR	TYPE
1-G-6	Chlorine Contact Channel Effluent	Bypass	54 x 54	20	20	Floor Stand w/crank	
1-G-7	Chlorine Contact Channel Effluent	Bypass	54 x 54	20	20	Floor Stand w/crank	
1-G-8	Chlorine Contact Channel Effluent	Partition	54 x 54	20	20	Floor Stand w/crank	
1-G-9	Chlorine Contact Channel Inlet	Inlet	54 x 54	12	12	Floor Stand w/crank	
1-G-10	Chlorine Contact Channel Inlet	Bypass	54 x 54	12	12	Floor Stand w/crank	
1-G-11	Chlorine Contact Channel Inlet	Inlet	54 x 54	12	12	Floor Stand w/crank	
1-G-12	Chlorine Contact Channel Inlet	Partition	54 x 54	12	12	Floor Stand w/crank	

NOTE: In addition, existing gates 1-G-2 and 1-G-4 shall be repaired as described in the specifications.

COATED SYSTEM 103

CAST-IN-PLACE ANCHOR BOLTS

CHLORINATOR AND CHEMICAL FEED SCHEDULE

FEEDER NO.	LOCATION	SERVICE	TYPE	ELECTRIC SUPPLY	CAPACITY	REMARKS
6-FD-13	Chemical Building	Chlorine	Automatic Control	75W	4,000 lbs/day	
6-FD-14	Chemical Building	Sulfur Dioxide	Automatic Control	75W	4,000 lbs/day	
6-FD-1(1)	Chemical Building	Chlorine	Automatic Control	75W (Exist.)	2,000 lbs/day	
6-FD-3(1)	Chemical Building	Chlorine	Automatic Control	75W (Exist.)	4,000 lbs/day	
6-FD-5(1)	Chemical Building	Sulfur Dioxide	Automatic Control	75W (Exist.)	2,000 lbs/day	
6-FD-9(2)	Chemical Building	Caustic Soda	Hydraulic Diaph Pump	1/2HP (Exist.)	50 gph at 50 psi	

NOTE: (1) These units are existing and require an increase in capacity. See specifications Sections 11281 & 11282.
(2) Replace pump only.

TANK SCHEDULE

TANK NO.	LOCATION	SERVICE	CAPACITY GAL./cu.ft.	SIZE (FT) DIA X SHELL	MATERIAL	REMARKS
2-T-1	East end of Chlorine Contact Channel	Surge Control	400 cu.ft.	6 x 14	Steel	with accesories
7-T-2	Waste Washwater Holding Tank	Caustic Storage	4,500 gal.	6.5 x 18	Steel	with accesories
7-T-3	Waste Washwater Holding Tank	Caustic Storage	4,500 gal.	6.5 x 18	Steel	with accesories

METER SCHEDULE

METER NO.	LOCATION	SERVICE	TYPE	PIPE SIZE (INCH)	FLOW RANGE (GPH)	REMARKS
1-M-1(1)	Chlorine Contact Channel Inlet	Filter Effluent	Open-Type Propeller	42	2,500-25,000	
1-M-3	Chlorine Contact Channel Inlet	Chlorine Gas	Rotameter	3/4	2,000 PPD	
2-M-2(1)	Meter Vault "East"	Reclaimed Water	Magnetic	16	1,200-12,000	
4-M-1(1)	Filter Diversion Box	Filter Influent	Propeller	42	2,500-25,000	
7-M-2	Waste Washwater Holding Tank	Water	Batch	2		

NOTE: (1) Existing Meter to be replaced as indicated herein and in the specifications.

04734

REGISTERED PROFESSIONAL ENGINEER SAMI A. DOUARA No. 25824 Exp. 6/30/93 MECHANICAL STATE OF CALIFORNIA

08 24 94 C.O.M.

PROJECT RECORD DOCUMENT
C.W. Roen Const Co.
P.O. 4, Danville, CA 94526
DATE: 2-10-94 By: BEL

REV	DATE	BY	DESCRIPTION
RD	2-10-94	BEL	AS-BUILT - Valve Sch

SCALE: NONE

WARNING: 0 1/2 1 — IF THIS BAR DOES NOT MEASURE 1" THEN DRAWING IS NOT TO SCALE.

DESIGNED / DRAWN / CHECKED: S Douara

SUBMITTED: PROJECT ENGINEER — 41019 R.C.E. NO. — 11/26/90 DATE

RECOMMENDED: JAMES M. MONTGOMERY CONSULTING ENGINEERS, INC. — 32699 R.C.E. NO. — 11/26/90 DATE

JMM James M. Montgomery Consulting Engineers, Inc. Pasadena, California

APPROVED — CONTRACT APPROVAL ON ORIGINAL — DATE

APPROVED — DATE

LAS VIRGENES MWD / TRIUNFO CSD
TAPIA WRF -REGIONAL FACILITIES EXPANSION IV
FILTRATION / DISINFECTION ADDITION

EQUIPMENT SCHEDULES

SHEET M-3 OF 110 SHEETS

JOB NO. 870.025 FILE CO

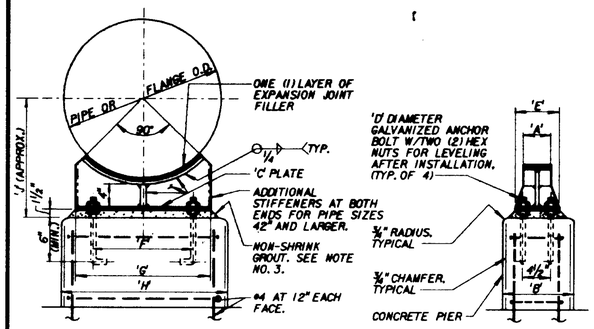

DIMENSIONS IN INCHES												
NOMINAL PIPE SIZE						SUPPORTING						
						PIPE				FLANGE		
	'A'	'B'	'C'	'D'	'E'	'F'	'G'	'H'	'J'	'F'	'G'	'H'	'J'
6	4	12	3/8	5/8	6	4 1/2	6	12	10	6 1/2	9	16	13
8	4	12	3/8	5/8	6	5	8	13	11	7 1/2	9	16	14
10	4	12	3/8	5/8	6	6	9	15	12	9	13	18	15
12	4	12	3/8	5/8	6	7	11	17	13	10	15	20	16
14	4	12	3/8	5/8	6	8	12	17	14	11	16	21	17
16	4	12	3/8	5/8	6	9	13	19	15	12	18	24	18
18	4	12	3/8	5/8	6	10	14	20	16	13	19	24	19
20	5	12	3/8	5/8	6	10	15	21	17	15	21	26	21
22	5	12	3/8	5/8	6	12	18	24	18	16	23	28	22
24	5	12	3/8	5/8	6	13	19	24	19	16	24	30	23
26	5	12	3/8	3/4	6	14	21	27	20	18	26	32	24
30	5	12	3/8	3/4	6	16	23	28	22	20	29	34	26
34	5	15	3/8	3/4	6	18	26	32	24	22	33	39	29
36	6	15	3/8	3/4	6	19	27	32	25	24	34	40	30
42	6	18	1/2	1	8	21	31	36	28	27	39	45	33
48	6	18	1/2	1	8	24	36	42	31	30	44	50	37
54	6	18	1/2	1	8	28	40	46	34	34	48	56	40
60	6	18	1/2	1 1/8	8	32	45	52	37	36	54	60	44
66	6	18	1/2	1 1/8	8	33	49	56	40	40	59	66	47
72	6	18	1/2	1 1/8	8	36	53	60	43	44	63	70	50

NOTES:

1. WHEN SUPPORTING PIPE AND FLANGE ALTERNATELY ON THE SAME LINE, CONCRETE PIERS FOR PIPE SUPPORTS SHALL ALL HAVE THE SAME DIMENSION 'H' FOR FLANGE SUPPORT.
2. PIPE SUPPORTS TO BE LOCATED IN PLAN AT POINTS MARKED THUS: (X)
3. WHERE DIFFERENTIAL SETTLEMENT IS LIKELY TO OCCUR, OMIT GROUT AS DIRECTED BY THE ENGINEER.
4. GALVANIZE AFTER FABRICATION.

PIPE SUPPORT

M-109 REV. 091587 JMM

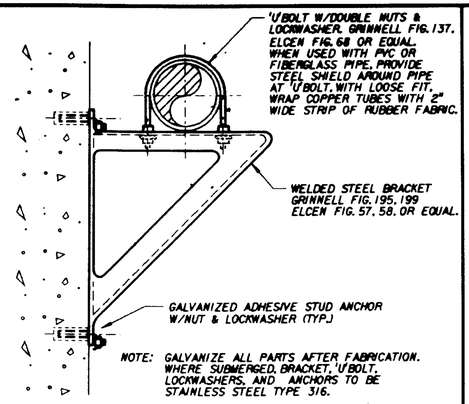

NOTE: GALVANIZE ALL PARTS AFTER FABRICATION. WHERE SUBMERGED, BRACKET, 'U' BOLT, LOCKWASHERS, AND ANCHORS TO BE STAINLESS STEEL TYPE 316.

PIPE BRACKET

M-104 REV. 091587 JMM

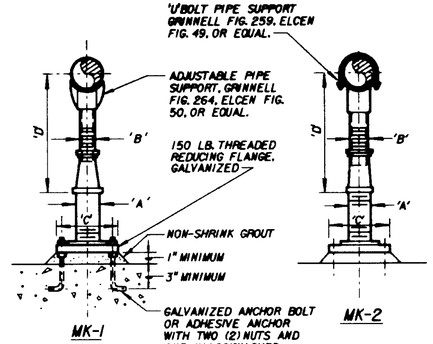

ADJUSTABLE PIPE SUPPORT APPROXIMATE DIMENSIONS IN INCHES					
PIPE SIZE	'A'	'B'	'C'	'D' MINIMUM	'D' MAXIMUM
2-1/2	2-1/2	1-1/2	9	8	11-1/2
3	2-1/2	1-1/2	9	8-1/4	11-3/4
3-1/2	2-1/2	1-1/2	9	8-1/2	12
4	3	* 2-1/2	9	10-1/4	14
6	3	* 2-1/2	9	11-5/8	15-1/4
8	3	* 2-1/2	9	13-5/8	16-1/2
10	3	* 2-1/2	9	14-5/8	18-1/4
12	3	* 2-1/2	9	15-5/8	19-3/4
14	4	3	11	18-7/8	20-3/4
16	4	3	11	19-7/8	22-1/4
18	6	3-1/2	13-1/2	21-1/4	24
20	6	3-1/2	13-1/2	23-1/4	25-1/2
24	6	4	13-1/2	26-1/2	28-1/4
30	6	4	13-1/2	29-5/8	31-1/2
32	6	4	13-1/2	30-5/8	32-3/4
36	6	4	13-1/2	32-5/8	34-3/4

* SEE MFR.

ADJUSTABLE PIPE SUPPORT WITH OR WITHOUT 'U' BOLT

M-108 REV. 091587 JMM

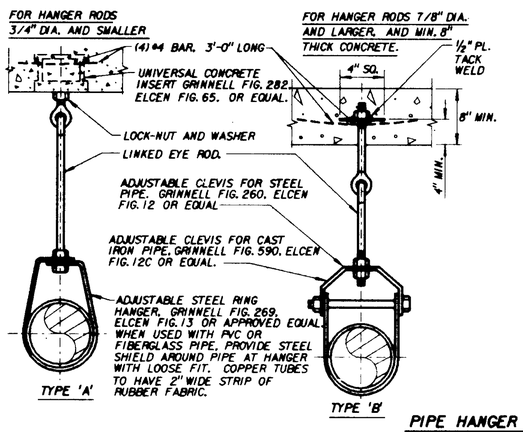

PIPE HANGER RODS AND SUPPORT SPACING					
PIPE DIA.	ROD DIA.	MAX. SUPPORT SPACING (FEET)		WEIGHT LIMIT (LBS.)	
(INCHES)	(INCHES)	STL. PIPE	C.I. PIPE	TYPE 'A'	TYPE 'B'
1 & SMALLER	3/8	6	5	610	1700
1 1/4 TO 2	3/8	9	5	610	1700
2 1/2 TO 3 1/2	1/2	12	5	1130	3200
4 TO 5	5/8	14	5	1430	3800
6, 8	3/4	16	5	1430	3800
10, 12	7/8	18	—	1430	3800
14, 16	1	20	—	1430	3800

NOTE: GALVANIZE ALL PARTS AFTER FABRICATION.

PIPE HANGER

M-107 REV. 091587 JMM

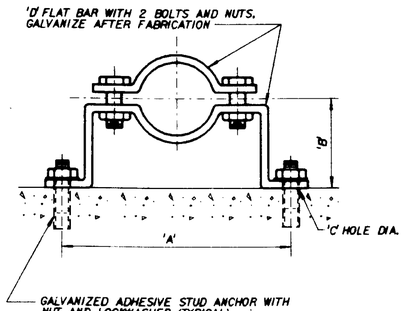

DIMENSIONS IN INCHES					
PIPE DIA.	'A'	'B' SEE NOTE 3 BELOW	'C' HOLE DIA	'D' FLAT BAR SIZE	LOAD RATING LBS. *
3/4	5-15/16	2-1/2	7/16	3/16 x 1-1/4	300
1	6-1/4	2-5/8	7/16	3/16 x 1-1/4	300
1-1/4	6-11/16	2-3/4	7/16	3/16 x 1-1/4	300
1-1/2	6-15/16	3	7/16	3/16 x 1-1/4	300
2	8-5/16	3-3/16	7/16	1/4 x 1-1/4	500
2-1/2	8-7/8	3-7/16	7/16	1/4 x 1-1/4	500
3	9-1/8	3-3/4	7/16	1/4 x 1-1/4	500
3-1/2	10-1/16	4	7/16	1/4 x 1-1/4	500
4	10-9/16	4-1/4	9/16	1/4 x 1-1/2	600
5	11-3/4	4-3/4	9/16	1/4 x 1-1/2	600
6	14-3/8	5-5/16	9/16	3/8 x 1-1/2	850
8	16-5/8	6-5/16	9/16	3/8 x 1-1/2	850

* SAFETY FACTOR OF 5

NOTES:

1. WHERE SUBMERGED, PIPE CLAMP, ANCHOR, SHIELD, NUTS AND LOCKWASHER TO BE TYPE 316 STAINLESS STEEL.
2. WHEN USED WITH PVC OR FIBERGLASS PIPE, PROVIDE STEEL SHIELD AROUND PIPE AT CLAMP, WITH LOOSE FIT. WRAP COPPER TUBES WITH 2" STRIP OF RUBBER FABRIC.
3. FOR FLANGED PIPING, INCREASE 'B' DIMENSION AS REQUIRED.

PIPE CLAMP FOR INDIVIDUAL PIPES

M-131 REV. 091587 JMM

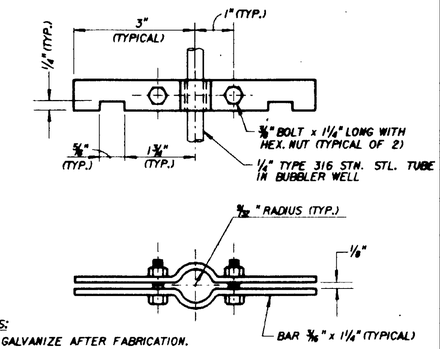

NOTES:

1. GALVANIZE AFTER FABRICATION.
2. WHERE SUBMERGED, BAR, BOLTS, AND NUTS TO BE TYPE 316 STAINLESS STEEL.

POSITIONING CLAMP

M-134 REV. 091587 JMM

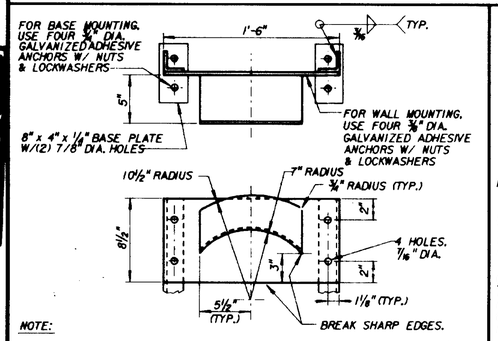

NOTE:

1. WHERE HOSE RACK IS FREE-STANDING, PROVIDE (2) STL. L'S 2 x 2 x 1/4 W/ BASE PLATES. (OMIT BASE PLATES WHERE ANGLES CAN BE SET IN CONCRETE.)
2. CONSTRUCTION: 8 GA. STEEL SHEET. ALL WELDED. GALVANIZED AFTER FABRICATION

HOSE RACK

M-905 REV. 091587 JMM

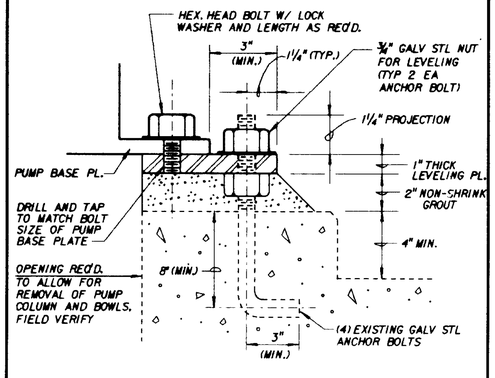

VERTICAL PUMP MOUNTING BASE

M-135 REV. 091587 JMM

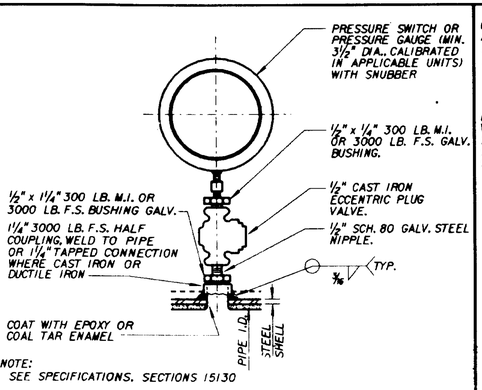

NOTE:
SEE SPECIFICATIONS, SECTIONS 15130

PRESSURE GAUGE OR PRESSURE SWITCH

M-606 REV. 000000 JMM

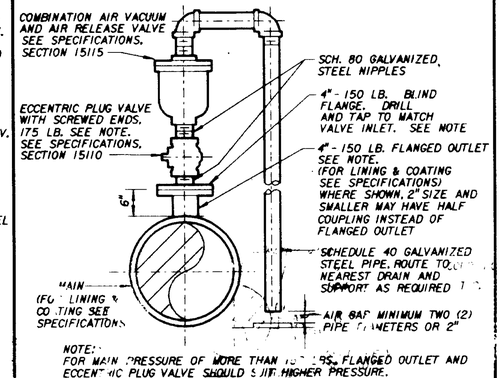

NOTE:
FOR MAIN PRESSURE OF MORE THAN 150 PSI, FLANGED OUTLET AND ECCENTRIC PLUG VALVE SHOULD SHIFT HIGHER PRESSURE.

AIR-VACUUM AND AIR-RELEASE VALVE ASSEMBLY 3" AND SMALLER

M-8[illegible] REV. 91587 J[illegible]

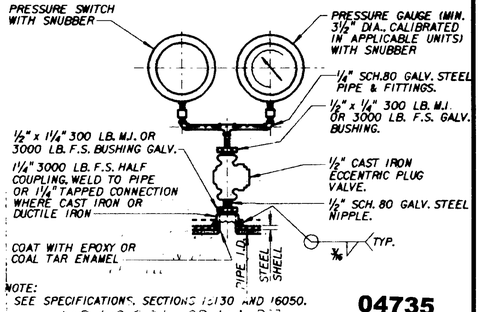

NOTE:
SEE SPECIFICATIONS, SECTIONS 15130 AND 16050.

04735

PRESSURE GAUGE AND PRESSURE SWITCH

M-610 REV. 091587 JMM

PROJECT RECORD DRAWING
C.W. Rosen Const. Co.
P.O. & Oswald, Co. Const.
DATE: 2-10-94

REV	DATE	BY	DESCRIPTION
RD	2-11-94	MEW	AS-BUILT - NO CHANGES

SCALE: NONE

WARNING: 0 1/2 1 — IF THIS BAR DOES NOT MEASURE 1" THEN DRAWING IS NOT TO SCALE.

DESIGNED [illegible]
DRAWN [illegible]
CHECKED S. Douara

SUBMITTED: [illegible] PROJ. ENGINEER 41019 R. C. E. NO. 11/26/90 DATE
[illegible] M. MONTGOMERY CONSULTING ENGINEERS, INC. 33699 R. C. E. NO. 11/26/90 DATE

James M. Montgomery Consulting Engineers, Inc.
Pasadena, California

APPROVED: DISTRICT [illegible]
APPROVED: [illegible] DATE

LAS VIRGENES MWD / TRIUNFO CSD
TAPIA WRF - REGIONAL FACILITIES EXPANSION IV
FILTRATION / DISINFECTION ADDITION
[redacted] - 1

SHEET M-4 OF 110 SHEETS

JOB No. 1870.08.18 FILE No.

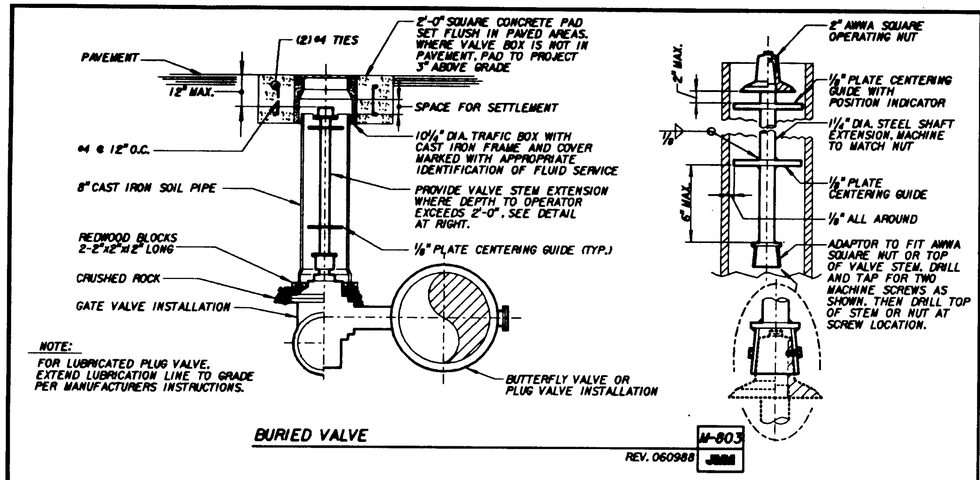

BURIED VALVE — M-803 — REV. 060988 — JMM

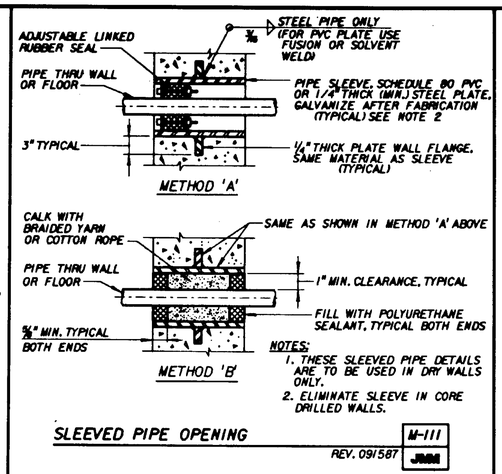

SLEEVED PIPE OPENING — M-111 — REV. 091587 — JMM

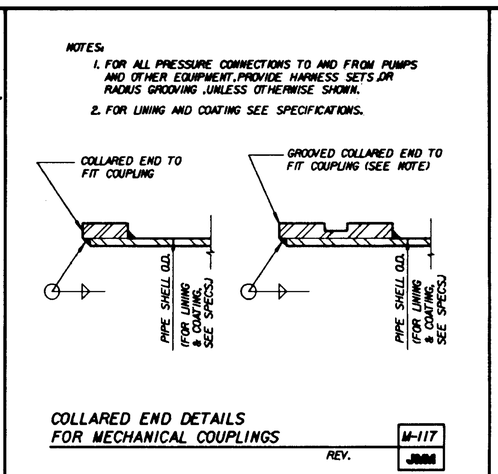

COLLARED END DETAILS FOR MECHANICAL COUPLINGS — M-117 — REV. — JMM

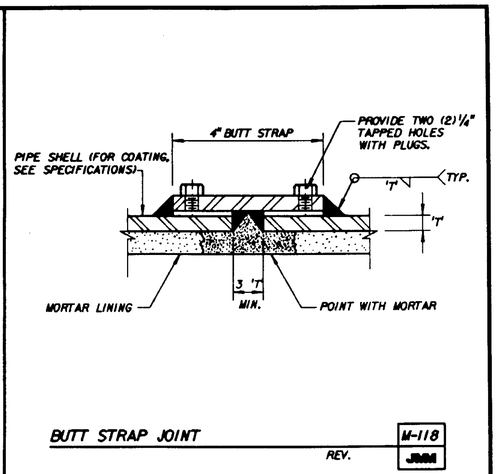

BUTT STRAP JOINT — M-118 — REV. — JMM

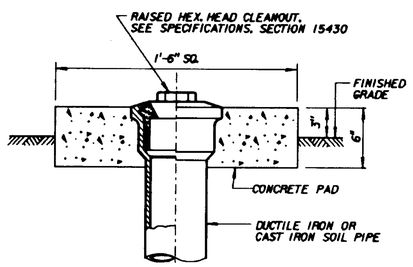

CLEANOUT TO GRADE — M-306 — REV. 091587 — JMM

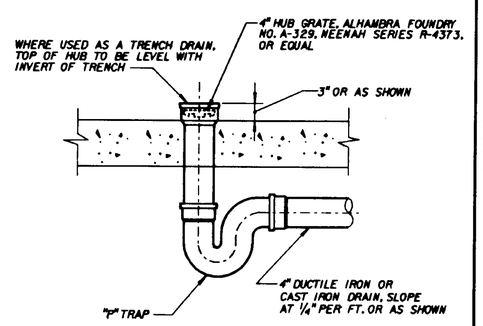

HUB DRAIN — M-304 — REV. 091587 — JMM

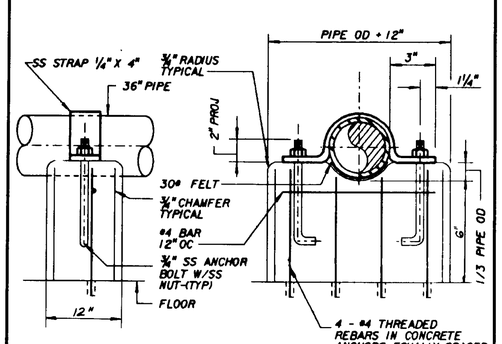

CONCRETE PIPE SUPPORT WITH STRAP — A — REV. 022190 — IM-3

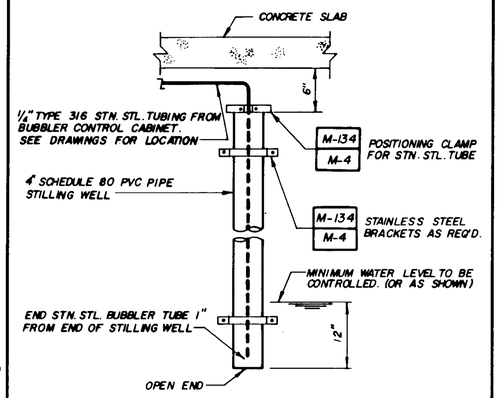

BUBBLER STILLING WELL — B — REV. 022490 — IM-2

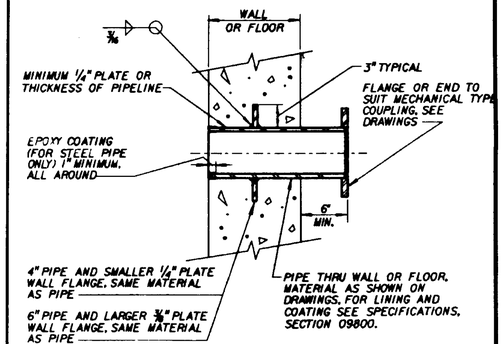

FABRICATED PIPE THIMBLE — C — REV. 091587

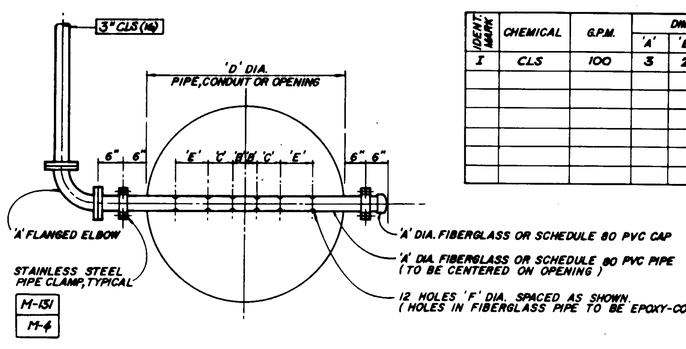

IDENT. MARK	CHEMICAL	G.P.M.	DIMENSIONS IN INCHES					
			'A'	'B'	'C'	'D'	'E'	'F'
I	CLS	100	3	2	4	30	5 1/2	5/8

PROJECT-RECORD DOCUMENT
C.W. Roen Const Co.
P.O. 4, Danville, CA 94526
DATE: 2-10-94 By: BEd

CHEMICAL DIFFUSER IN STRUCTURE — D — 051587 — IM-2

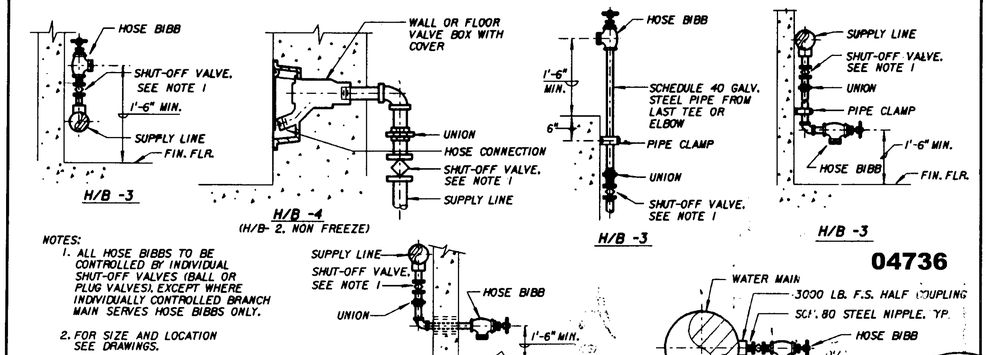

04736

HOSE BIBBS — M-904 — REV. 091587 — JMM

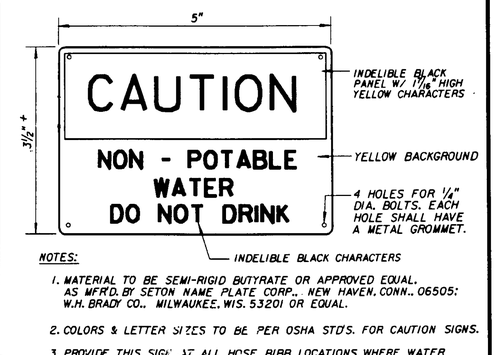

WARNING SIGN FOR NON-POTABLE WATER — M-912 — REV. 091587 — JMM

04736

REV	DATE	BY	DESCRIPTION

SCALE: NONE

WARNING: 0 1/2 1 — IF THIS BAR DOES NOT MEASURE 1" THEN DRAWING IS NOT TO SCALE.

DESIGNED Lalal R. Phanuy
DRAWN M. Bhavangari
CHECKED S. Douara

SUBMITTED Omar M. Pacas — PROJECT ENGINEER — R. C. E. NO. 41019 — DATE 11/26/90
ENGINEER — JAMES M. MONTGOMERY CONSULTING ENGINEERS, INC. — R. C. E. NO. 33697 — DATE 11/26/90

JMM James M. Montgomery Consulting Engineers, Inc.
Pasadena, California

APPROVED DISTRICT APPROVAL ON COVER SHEET — DATE
APPROVED — DATE
APPROVED — DATE

LAS VIRGENES MWD / TRIUNFO CSD
TAPIA WRF - REGIONAL FACILITIES EXPANSION IV
FILTRATION / DISINFECTION ADDITION
MECHANICAL DETAILS - 2

SHEET M-5 OF 5 SHEETS

JOB No. 870.0812 FILE No. LVXMEC ICELVWE.DGN

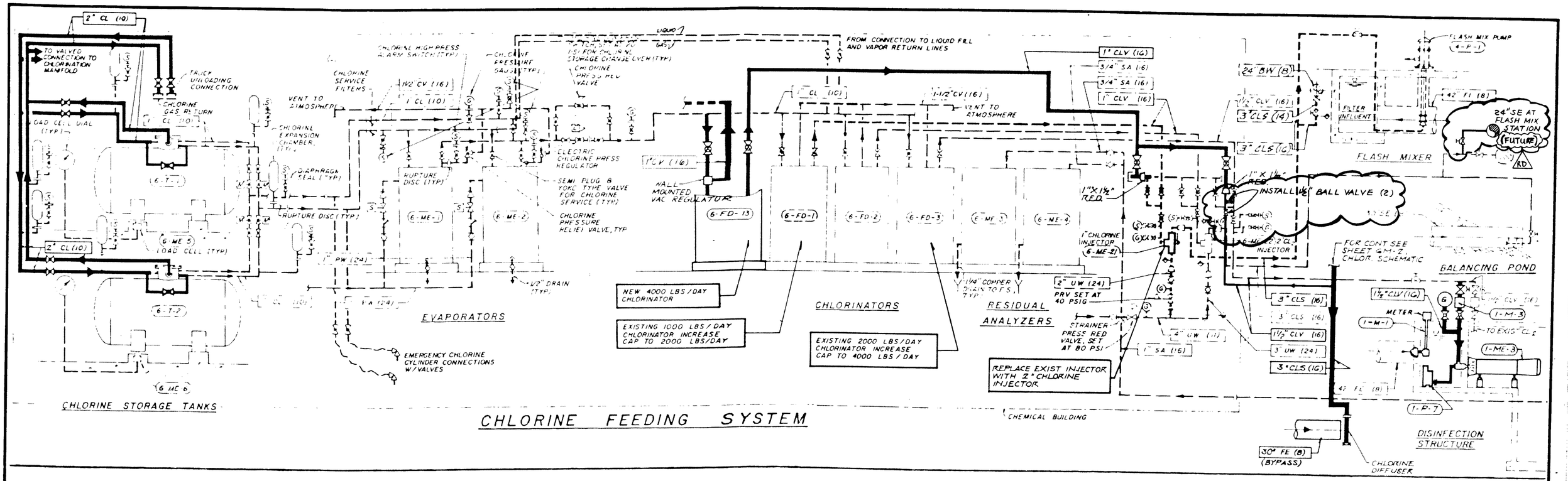

CHLORINE FEEDING SYSTEM

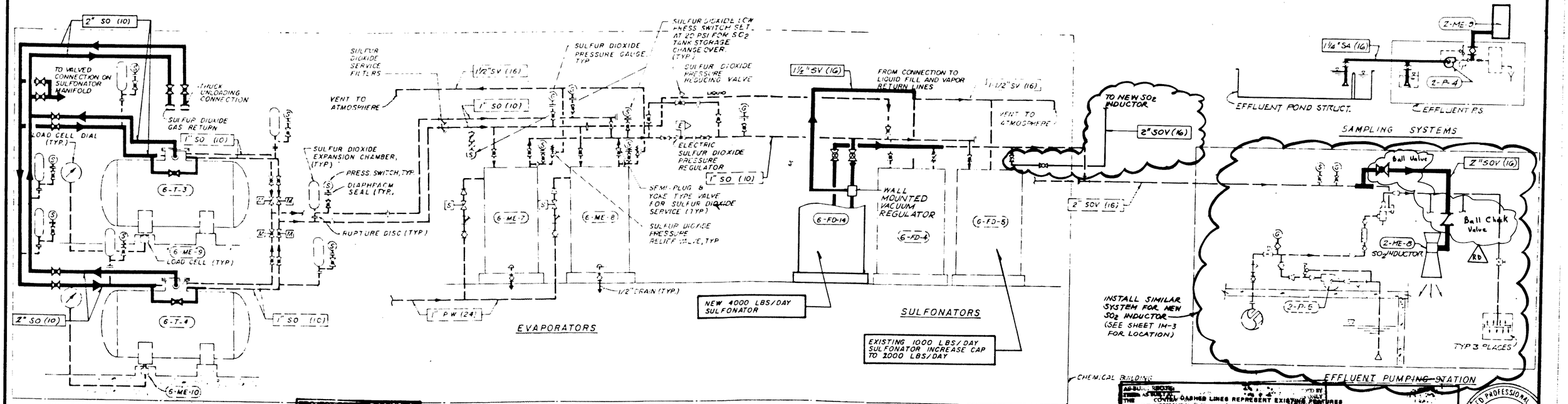

SULFUR DIOXIDE FEEDING SYSTEM

PROJECT RECORD DOCUMENT
C.W. Roen Const Co.
P.O. 4, Danville, CA 94526
DATE: 1-16-91 By: [illegible]

AS-BUILT RECORD
THE CONTRACTOR HAS REVIEWED THE INFORMATION SHOWN ON THIS DRAWING AND REPORTS THE FOLLOWING:
COVER: DASHED LINES REPRESENT EXISTING FEATURES
1. THE SOLID LINES REPRESENT NEW INSTALLATION
2. ALL VALVES, UNIONS, FITTINGS AND PIPING FOR CHLORINE AND SULFUR DIOXIDE SHALL BE IN ACCORDANCE WITH CHLORINE INSTITUTE STANDARD
DATE: 08.24.94

REGISTERED PROFESSIONAL ENGINEER — SAMI A. DOUARA — No. 20022 — Exp. 6/30/93 — MECHANICAL — STATE OF CALIFORNIA

04737

REV	DATE	BY	DESCRIPTION
1D	1-9-91	DPS	SO_2 - Valves

SCALE: NONE

WARNING: 0 1/2 1 — IF THIS BAR DOES NOT MEASURE 1" THEN DRAWING IS NOT TO SCALE.

DESIGNED [illegible] DRAWN [illegible] CHECKED S. Douara

SUBMITTED: PROJECT ENGINEER [illegible] 410M R.C.E. NO. 11/20/90 DATE
RECOMMENDED: [illegible] 33699 R.C.E. NO. 11/26/90 DATE
JAMES R. MONTGOMERY CONSULTING ENGINEERS, INC.

JMM James M. Montgomery Consulting Engineers, Inc. Pasadena, California

APPROVED: DISTRICT APPROVAL ON COVERSHEET DATE
APPROVED: _____ DATE

LAS VIRGENES MWD / TRUMPO CSD
TAPIA WRF - REGIONAL FACILITIES EXPANSION IV
FILTRATION / DISINFECTION ADDITION

CHLORINE AND SULFUR DIOXIDE SCHEMATIC

SHEET M-6 OF 110 SHEETS

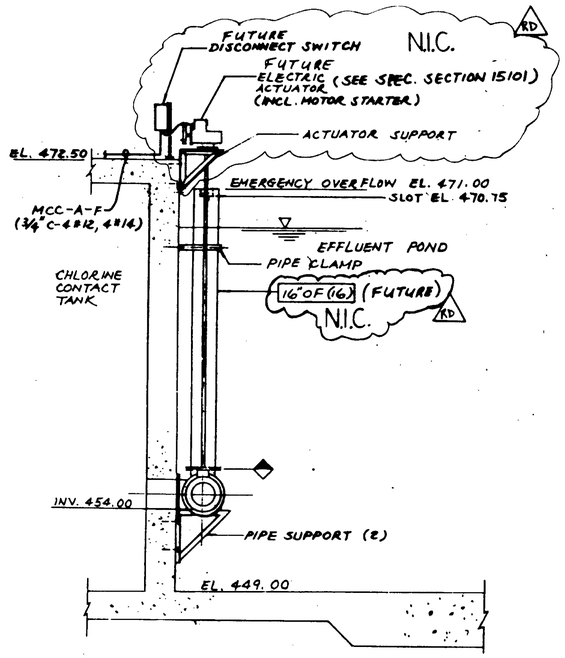

SECTION 1
SCALE: 1/4"=1'-0"

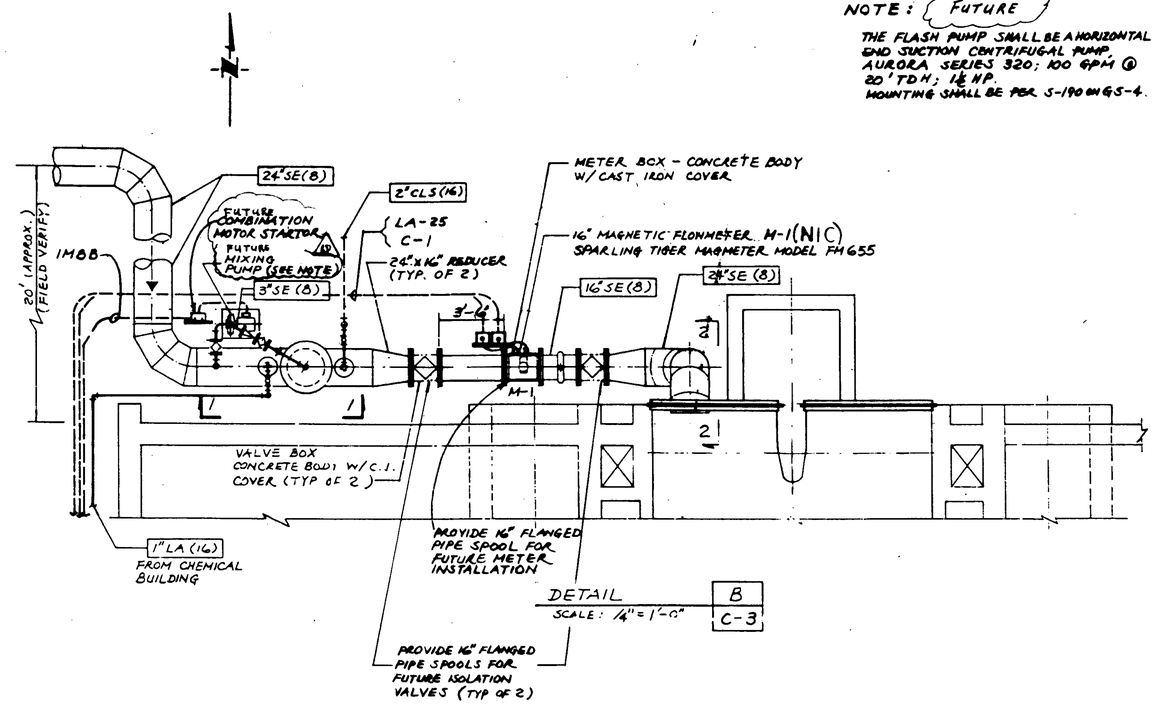

DETAIL B
SCALE: 1/4"=1'-0"
C-3

NOTE: FUTURE

THE FLASH PUMP SHALL BE A HORIZONTAL END SUCTION CENTRIFUGAL PUMP. AURORA SERIES 320; 100 GPM @ 20' TDH; 1½ HP. MOUNTING SHALL BE PER S-190 ON GS-4.

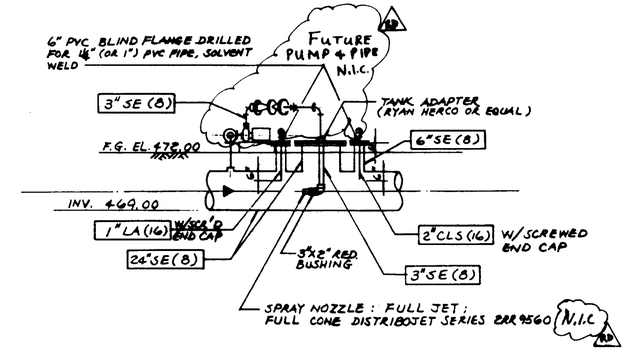

SECTION VIEW 1-1
SCALE: 1/4"=1'-0"

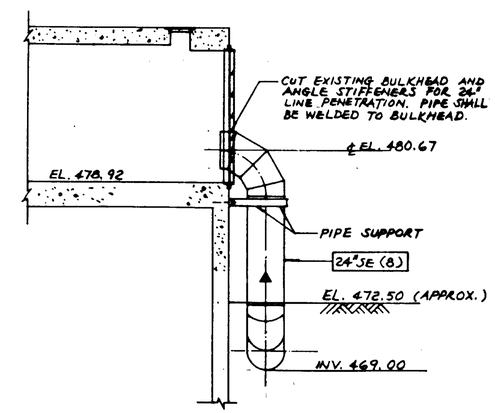

SECTION VIEW 2-2
SCALE: 1/4"=1'-0"

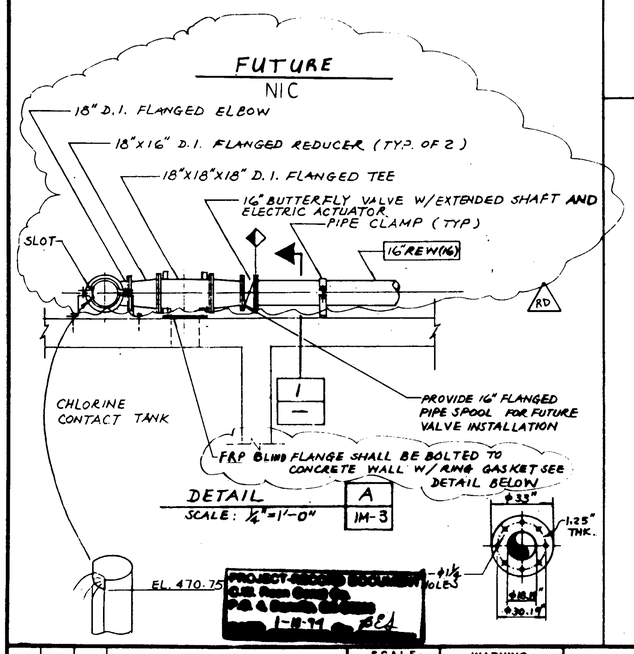

DETAIL A
SCALE: 1/4"=1'-0"
1M-3

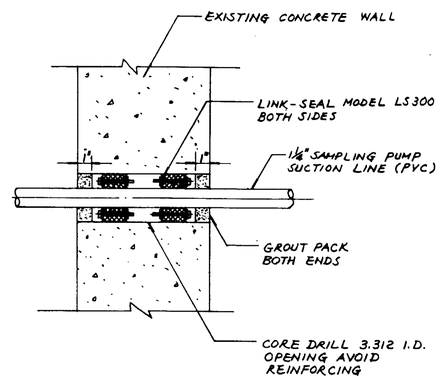

PENETRATION DETAIL C
1M-3 C-3

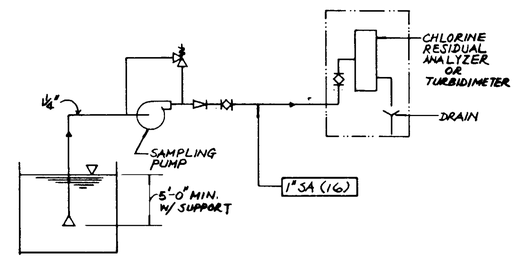

FUTURE
SAMPLING SYSTEM (TYP OF 3)
D
1M-3 C-3

04738

AS-BUILT REVISIONS
THESE AS-BUILT DRAWINGS ARE BASED ON INFORMATION PROVIDED BY THE CONTRACTOR. WE ASSUME NO RESPONSIBILITY FOR THE ACCURACY OF THESE DRAWINGS THAT THE INFORMATION SHOWN HEREON WAS TRANSFERRED TO US BY THE CONTRACTOR. THE CONTRACTOR ASSUMES ALL RESPONSIBILITY FOR THE ACCURACY OF THESE DRAWINGS AS-BUILT RECORD DRAWINGS BASED ON INFORMATION PROVIDED BY THE CONTRACTOR.
DATE 08-24-94 BY: [illegible]

REV	DATE	BY	DESCRIPTION
RD	1-18-94	[illegible]	MARK FUTURE WORK

SCALE: AS NOTED

WARNING: 0 1/2 1 — IF THIS BAR DOES NOT MEASURE 1" THEN DRAWING IS NOT TO SCALE.

DESIGNED ____ DRAWN ____ CHECKED ____

SUBMITTED — PROJECT ENGINEER — R.C.E. NO. — DATE
RECOMMENDED — JAMES M. MONTGOMERY CONSULTING ENGINEERS, INC. — R.C.E. NO. — DATE

JMM James M. Montgomery Consulting Engineers, Inc. Pasadena, California

APPROVED ____ DATE
APPROVED ____ DATE

LAS VIRGENES MWD / TRIUNFO SCD
TAPIA WRF - REGIONAL FACILITIES EXPANSION IV
FILTRATION / DISINFECTION ADDITION

MECHANICAL DETAILS - 3

SHEET M-7 OF SHEETS

(1) 3/8" SS TUBE FROM WELL

6" FLGD BURIED ECC PV (TYP) M-883 / M-5

F.M.

6" GW

6'-6"

OBSERVATION WELL

TERMINATE PIPELINE AT ELEV. 467.00 (TYP)

4'-8"±

6" SPD (TBG)

6" UW

OBSERVATION WELL

(1) 3/8" S.S. TUBE FROM WELL FOR CONTINUATION SEE SHT 1-M-3

3'-0"

EXISTING FILTER INFLUENT PUMP STATION SEE SHT 3M-1

BALANCING POND

OBSERVATION WELL.

(3) 3/8" S.S. TUBES FROM WELLS TO BUBBLER PANEL ATTACH TO WALL W/ SS CLIPS

B / 1M-2 REFERENCE WELL

7'-0"

A / 1M-2 OBSERVATION WELL

9'-0"

A / 1M-2 OBSERVATION WELL

3'-6"

4" S (TBG) SCUM LINE. PROVIDE PIPE SUPPORTS AS REQD. SEE M-131, SHT M-4

EFFLUENT POND

36" FE (B)

APPROX. LOCATION OF EXISTING OBSERVATION WELL, TO BE REMOVED.

A / 1M-2 OBSERVATION WELL CONNECT TO EXIST TUBING AT EXIST WELL

FOR ENLARGED VIEW OF THIS AREA SEE WEST PLAN SHEET 1M-2

APPROX LOCATION OF EXISTING REFERENCE WELL, TO BE REMOVED.

EXISTING 4" SCUM LINE TO BE RELOCATED NORTH AS SHOWN

APPROX LOCATION OF EXISTING OBSERVATION WELLS, TO BE REMOVED.

REMOVE EXISTING RAILING SEE STRUCTURAL SHTS

EXISTING BOLLARDS TO REMAIN IN PLACE (TYP)

FOR ENLARGED VIEW OF THIS AREA SEE EAST PLAN SHEET 1M-3

CHLORINE CONTACT TANK - PLAN

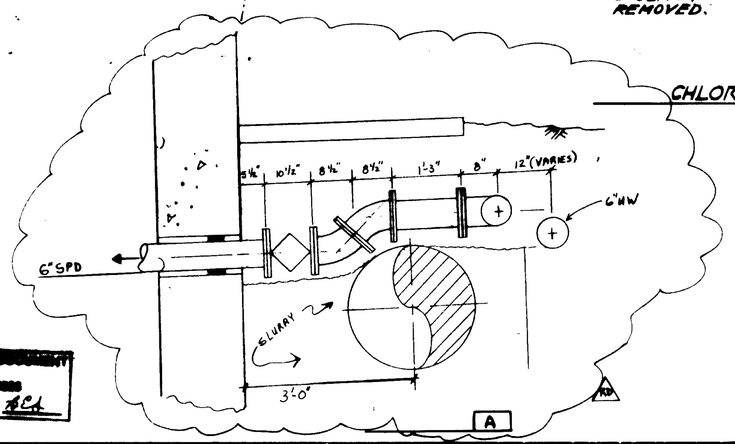

NOTE:
CONTRACTOR SHALL REPLACE THE LIDS/LID RESTRAINERS ~~AND SEAT MOUNTINGS~~ ON 14 EXISTING 4" PRESSURE RELIEF VALVES LOCATED IN THE FLOOR OF THE EXISTING CHLORINE CONTACT CHANNELS. ALL MATERIAL SHALL BE THE SAME TYPE MATERIAL AS THE EXISTING MATERIAL. EXISTING EMBEDDED VALVE BODIES SHALL REMAIN IN PLACE.

04739

REGISTERED PROFESSIONAL ENGINEER SAMI A. DOUARA No. 13824 Exp. 12/31/93 MECHANICAL STATE OF CALIFORNIA

AS-BUILT REVIEWED BY THEIR AS-BUILT ... REVIEWS ONLY THE CONTRACTOR ... VERIFIES ... ACCURATELY THAT THE INFORMATION FURNISHED ... THOSE RELYING ON THESE TRANSFERRED TO THOSE RECORD ... RECORD DRAWINGS ARE ADVISED ... AN INDEPENDENT VERIFICATION OF THESE ACTUAL ... BEFORE APPLYING ... ANY PURPOSE.
DATE 01-21-94 BY P. O'Neal

PROJECT RECORD DOCUMENT
C.W. Ross Const Co.
P.O. & Danville, CA 94526
DATE 2-10-94 By: [illegible]

REV	DATE	BY	DESCRIPTION
RD	2-10-94	RCL	AS-BUILT
1	12-5-91	N.B.	AS BID

SCALE: 3/32" = 1'-0"

WARNING: 0 1/2 1 — IF THIS BAR DOES NOT MEASURE 1" THEN DRAWING IS NOT TO SCALE.

DESIGNED [illegible]
DRAWN [illegible]
CHECKED S. Douara

SUBMITTED [illegible] 41019 11/26/90 — PROJECT ENGINEER / R.C.E. NO. / DATE
[illegible] 33699 11/26/90 — MANAGER, CIVIL AND STRUCTURAL CONSULTING AND ENGINEERING, INC. / R.C.E. NO. / DATE

JMM James M. Montgomery Consulting Engineers, Inc. Pasadena, California

AS-BUILT
DISTRICT APPROVAL ON ... DATE
APPROVED ... DATE

LAS VIRGENES MWD - TRIUNFO CSD
TAPIA WRF - REGIONAL FACILITIES EXPANSION IV
FILTRATION / DISINFECTION ADDITION
[redacted]

SHEET [redacted] OF 11 SHEETS

JOB No. 870-051B FILE No.

BALANCING POND

SECOND CONNECTION TO REFERENCE WELL – ONE LINE TO EACH BUBBLER

B — REFERENCE WELL

FOR CONTINUATION SEE SHT 1M-3

7'-0"

TERMINATE 1¼"SA AT ELEV-460.0 W/ FOOT VALVE

1-G-9

1-G-10

1-G-11

1-G-12

4" S (2G) NEW 4" CI PIPE

30"FE (1B)

D — M-5

ELEV

NEW CHLORINE CONTACT CHANNELS

TO MATCH EXISTING OPERATORS (TYP)

1¼"SA

3"CLS (1G)

CONNECT TO EXIST BUBBLER PANEL

EXISTING BUBBLER CONTROL PANELS

1-M-1

EXISTING BOLLARDS TO REMAIN IN PLACE (TYP)

1½" CLV (1G)

1-P-7

A — 1M-4

EXISTING CHLORINE CONTACT CHANNELS

FOR CONT SEE SHEET GM-2

C — –

1-ME-3

2000 LB/DAY REACTOR (SIMILAR TO EXISTING)

REPAIR EXISTING SLUICE GATE, SEE SPEC 6 SECT. 11293 (1-G-2)

REMOVE EXISTING STEEL PLATE COVER BEFORE INSTALLATION OF NEW REACTOR.

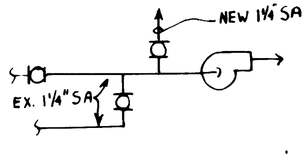

CHLORINE SAMPLING CONNECTION — C — –
NTS

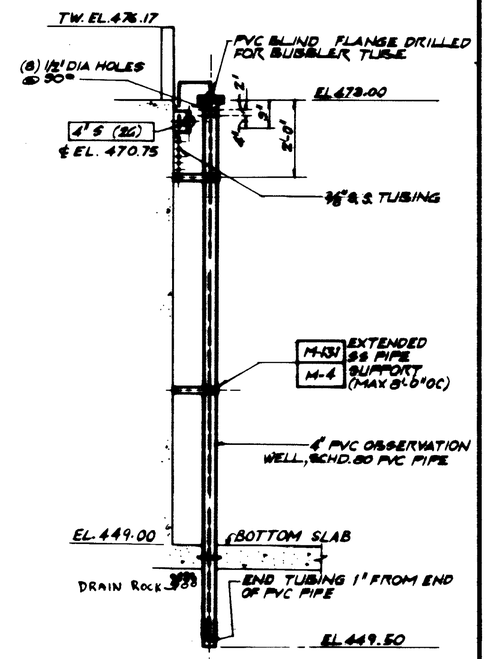

OBSERVATION WELL — A — 1M-1
NTS

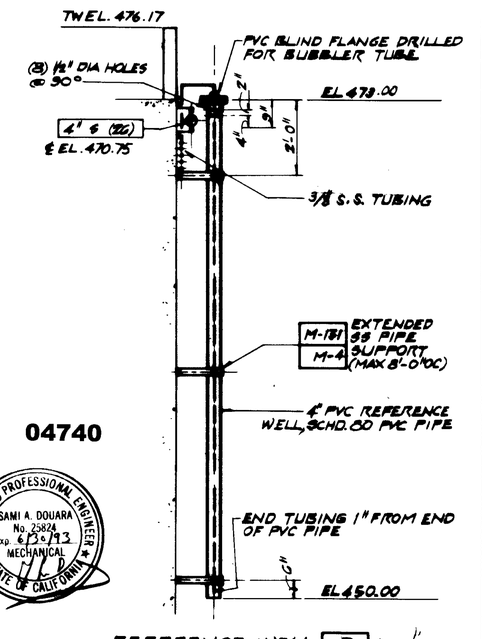

REFERENCE WELL — B — 1M-1
NTS

04740

REGISTERED PROFESSIONAL ENGINEER — SAMI A. DOUARA — No. 25824 — Exp. 6/30/93 — MECHANICAL — STATE OF CALIFORNIA

PROJECT RECORD DOCUMENT
C.W. Roen Const Co.
P.O. 4, Danville, CA 94526
DATE 2-10-94 By: BBL

RECORD DRAWINGS ARE ... OF THEIR ACCURACY BEFORE APPLYING IT FOR ANY PURPOSE.
DATE 08.24.94 BY C.C. Neal — VIRGEN-GERITZBERG

REV	DATE	BY	DESCRIPTION
RD	2-10-94	BBL	AS-BUILT – SA + BUBBLER LINES

SCALE: 1/4" = 1'-0"

WARNING: 0 ½ 1 — IF THIS BAR DOES NOT MEASURE 1" THEN DRAWING IS NOT TO SCALE.

DESIGNED — CHECKED — CALC.

SUBMITTED: Frank M. Roen — PROJECT ENGINEER — 41019 — R.C.E. NO. — 11/26/90 — DATE
Tak A. Reid — 33699 — R.C.E. NO. — 11/26/90 — DATE

James M. Montgomery Consulting Engineers, Inc.

APPROVED — DISTRICT APPROVAL ON CONSTRUCTION ... — DATE
APPROVED — DATE

LAS VIRGENES MWD / TUSD CSA
TUSA WRF REGIONAL FACILITY EXPANSION IV
FILTRATION / DISINFECTION ADDITION

SHEET [redacted] OF [redacted] SHEETS

JOB No. 870.0818 FILE No.

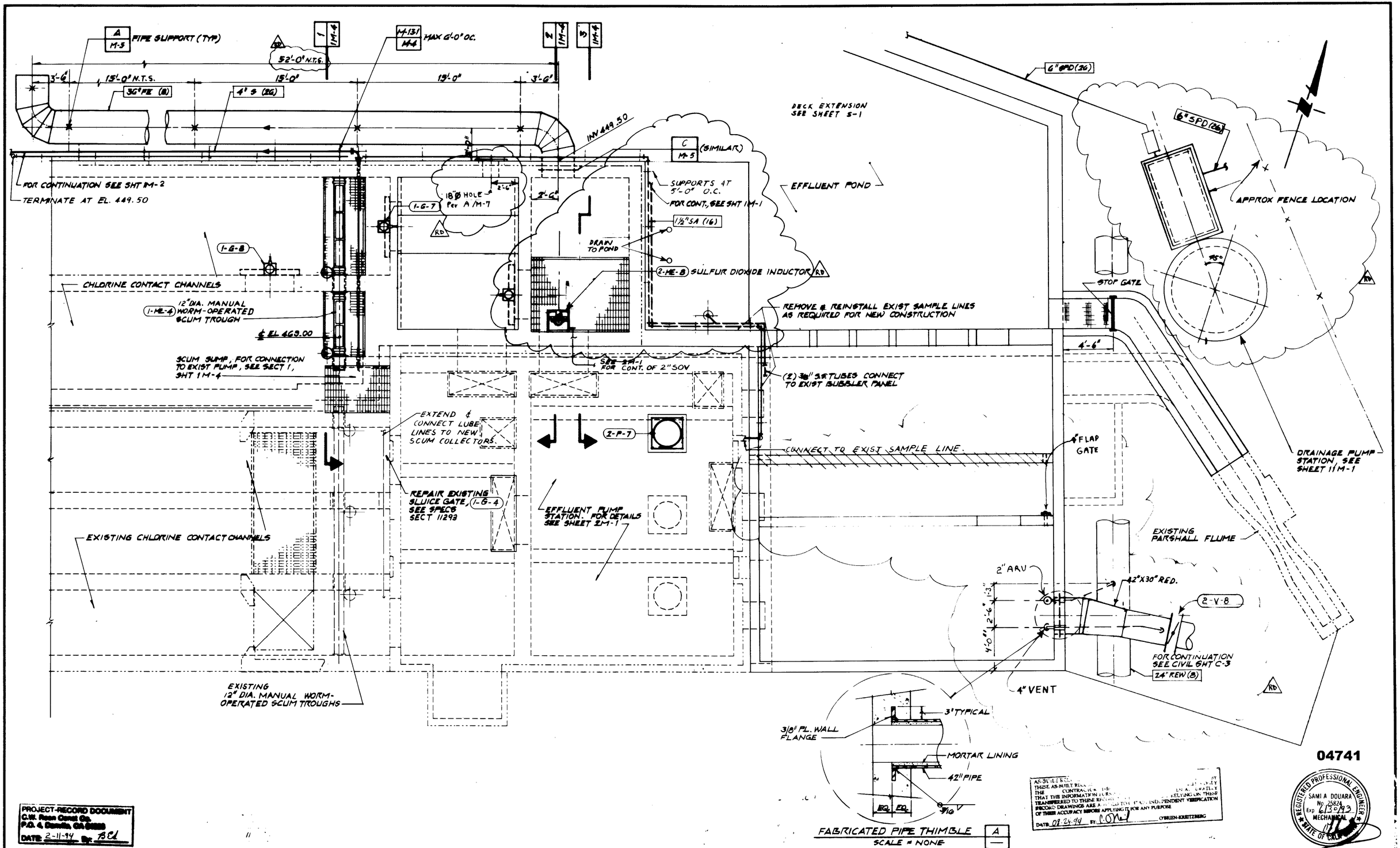
A M-5 PIPE SUPPORT (TYP)
52'-0" N.T.S.
M-13/M-4 MAX 6'-0" OC.
3'-6"
15'-0" N.T.S.
15'-0"
15'-0"
3'-6"
36" PE (B)
4" S (26)
INV 449.50
FOR CONTINUATION SEE SHT 1M-2
TERMINATE AT EL. 449.50
C M-5 (SIMILAR)
SUPPORTS AT 5'-0" O.C.
FOR CONT. SEE SHT 1M-1
18" Ø HOLE PER A/M-7
1-G-7
2'-6"
2'-6"
1½" SA (16)
DRAIN TO POND
2-ME-8 SULFUR DIOXIDE INDUCTOR
1-G-8
CHLORINE CONTACT CHANNELS
1-ME-4 12" DIA. MANUAL WORM-OPERATED SCUM TROUGH
℄ EL 469.00
SCUM SUMP, FOR CONNECTION TO EXIST PUMP, SEE SECT 1, SHT 1M-4
SEE 2M-1 FOR CONT. OF 2" SOV
EXTEND & CONNECT LUBE LINES TO NEW SCUM COLLECTORS
2-P-7
REPAIR EXISTING SLUICE GATE, 1-G-4 SEE SPECS SECT 11293
EFFLUENT PUMP STATION. FOR DETAILS SEE SHEET 2M-1
EXISTING CHLORINE CONTACT CHANNELS
EXISTING 12" DIA. MANUAL WORM-OPERATED SCUM TROUGHS
DECK EXTENSION SEE SHEET S-1
EFFLUENT POND
REMOVE & REINSTALL EXIST SAMPLE LINES AS REQUIRED FOR NEW CONSTRUCTION
(2) 3/8" SS TUBES CONNECT TO EXIST BUBBLER PANEL
CONNECT TO EXIST SAMPLE LINE
6" FLAP GATE
6" GPD (36)
6" SPD (26)
APPROX FENCE LOCATION
STOP GATE
4'-6"
DRAINAGE PUMP STATION, SEE SHEET 11M-1
EXISTING PARSHALL FLUME
2" ARV
42"X30" RED.
2-V-8
FOR CONTINUATION SEE CIVIL SHT C-3
24" REW (B)
4" VENT
3" TYPICAL
3/8" PL. WALL FLANGE
MORTAR LINING
42" PIPE
EQ. EQ.
FABRICATED PIPE THIMBLE
SCALE = NONE
A
04741
PROJECT-RECORD DOCUMENT
C.W. Ross Const Co.
P.O. 4, Gainesville, GA 30503
DATE 2-11-94 By: BCL
REGISTERED PROFESSIONAL ENGINEER
SAMI A DOUARA
No. 25824
Exp 6/30/93
MECHANICAL
STATE OF CALIFORNIA
RD 2-11-94 AS-BUILT
REV DATE BY REVISION
SCALE: 1/4" = 1'-0"
WARNING: IF THIS BAR DOES NOT MEASURE 1" WHEN DRAWING IS 100% TO SCALE.
DESIGNED
DRAWN
CHECKED S. DOUARA
SUBMITTED
PROJECT ENGINEER
R.C.E. NO. 41019 DATE 11/26/90
R.C.E. NO. 33699 DATE 11/26/90
Consulting Engineers, Inc.
Pasadena, California
APPROVED
DISTRICT ENGINEER
DATE
APPROVED
DATE
SAN LUIS & DELTA-MENDOTA WATER AUTHORITY
FILTRATION / DISINFECTION ADDITION
SHEET
JOB No. 870.02
FILE No.

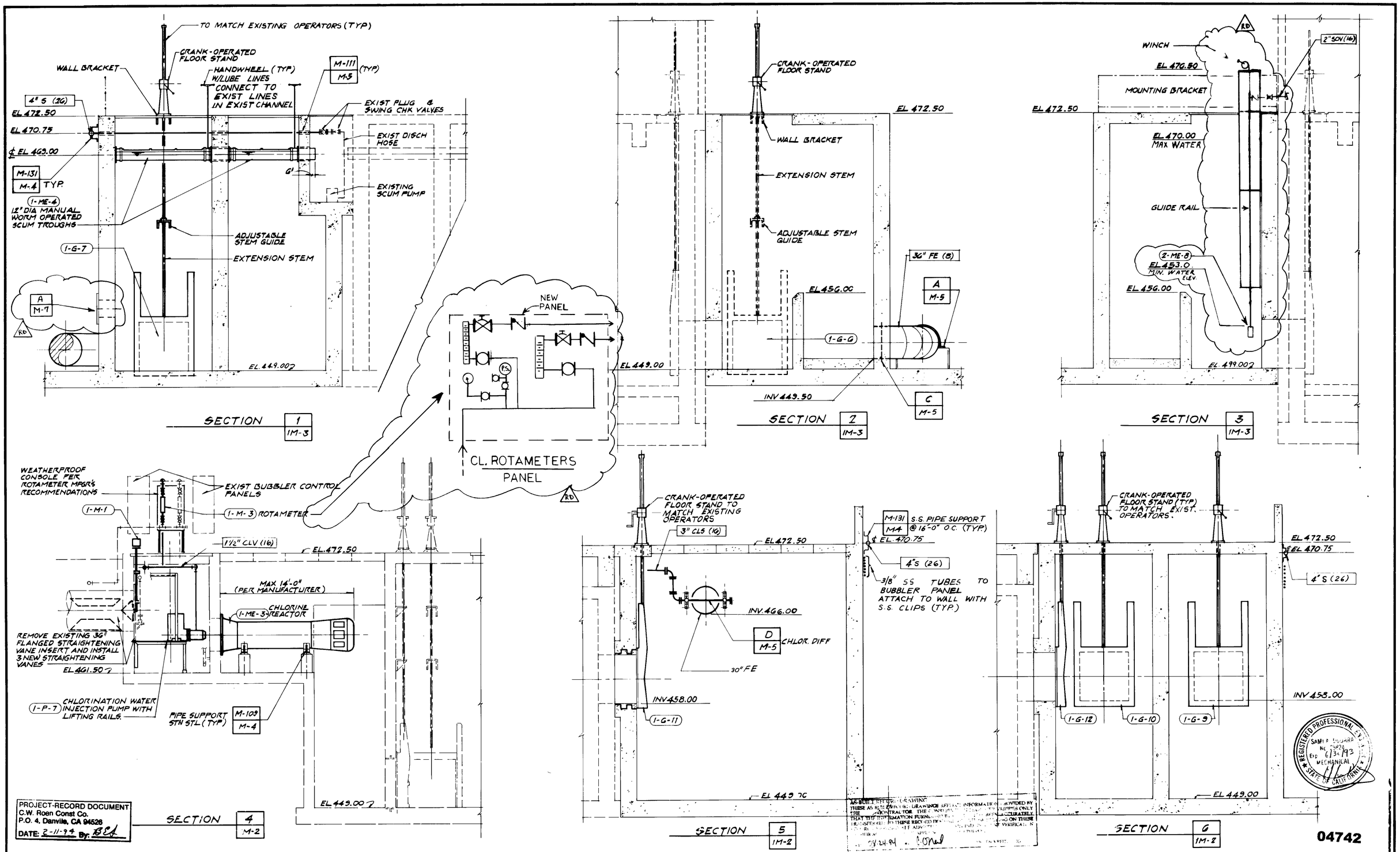

PROJECT-RECORD DOCUMENT
C.W. Roen Const Co.
P.O. 4, Danville, CA 94526
DATE: 2-11-94 By: BEA

AS-BUILT RECORD DRAWING
THESE AS BUILT RECORD DRAWINGS REFLECT INFORMATION PROVIDED BY THE CONTRACTOR. THE CONSULTANT HAS NOT VERIFIED THE INFORMATION FURNISHED ONLY THAT THE INFORMATION FURNISHED HAS BEEN TRANSFERRED TO THESE RECORD DRAWINGS ACCURATELY AND ON THESE DRAWINGS IT IS ADVISED THAT NO FIELD VERIFICATION WAS MADE.
3-24-94

REV	DATE	BY	DESCR DESCRIPTION
RD	2-11-94	BEA	AS-BUILT

SCALE: 1/4" = 1'-0"

WARNING: 0 1/2 1 — IF THIS BAR DOES NOT MEASURE 1" THEN DRAWING IS NOT TO SCALE.

DESIGNED / DRAWN / CHECKED

SUBMITTED: PROJECT ENGINEER — R.C.E. NO. 41019 — DATE 11/26/90
RECOMMENDED: JAMES M. MONTGOMERY CONSULTING ENGINEERS, INC. — R.C.E. NO. 33699 — DATE 11/26/90

James M. Montgomery Consulting Engineers, Inc.
Pasadena, California

APPROVED — DATE
APPROVED — DATE

LAS VIRGENES MWD / TRIUNFO CSD
TAPIA WRF REGIONAL FACILITIES EXPANSION IV
TAPIA FILTRATION / DISINFECTION ADDITION IV

SHEET [redacted] OF 11 SHEETS

JOB NO. 870.0213 FILE CC

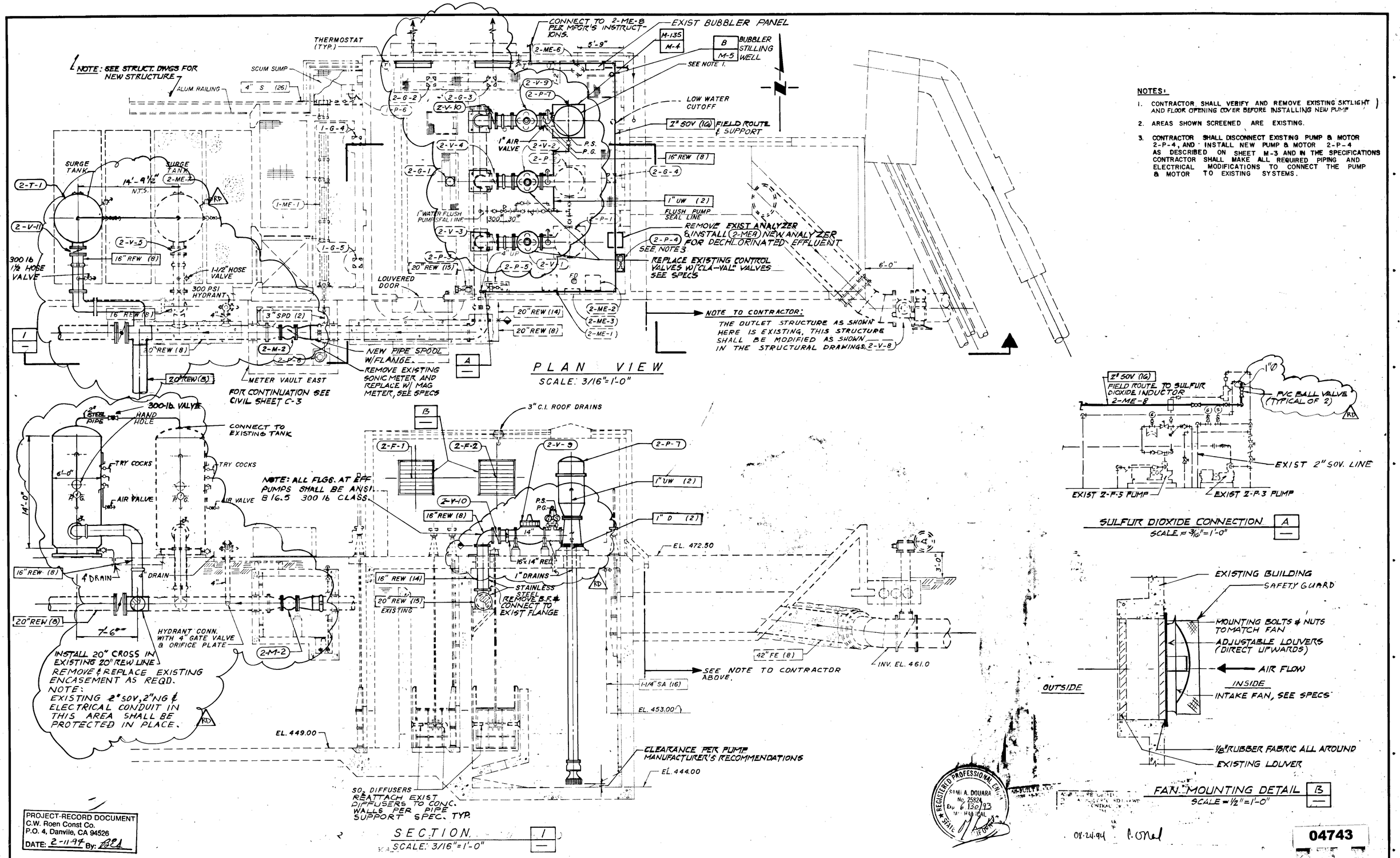

NOTES:

1. CONTRACTOR SHALL VERIFY AND REMOVE EXISTING SKYLIGHT AND FLOOR OPENING COVER BEFORE INSTALLING NEW PUMP
2. AREAS SHOWN SCREENED ARE EXISTING.
3. CONTRACTOR SHALL DISCONNECT EXISTING PUMP & MOTOR 2-P-4, AND INSTALL NEW PUMP & MOTOR 2-P-4 AS DESCRIBED ON SHEET M-3 AND IN THE SPECIFICATIONS. CONTRACTOR SHALL MAKE ALL REQUIRED PIPING AND ELECTRICAL MODIFICATIONS TO CONNECT THE PUMP & MOTOR TO EXISTING SYSTEMS.

PROJECT-RECORD DOCUMENT
C.W. Roen Const Co.
P.O. 4, Danville, CA 94526
DATE: 2-11-94 By: RBL

REV	DATE	BY	DESCRIPTION
RD	2-11-94	RBL	AS-BUILT

SCALE: AS NOTED

WARNING: 0 1/2 1 — IF THIS BAR DOES NOT MEASURE 1" THEN DRAWING IS NOT TO SCALE.

DESIGNED / DRAWN / CHECKED: S Douara

SUBMITTED: Jorge M. Pacas, PROJECT ENGINEER, 41019 R.C.E. NO., 11/26/90 DATE

RECOMMENDED: James M. Montgomery, JAMES M. MONTGOMERY CONSULTING ENGINEERS, INC., 33699 R.C.E. NO., 11/26/90 DATE

JMM James M. Montgomery Consulting Engineers, Inc. Pasadena, California

APPROVED: STRICT APPROVAL ON ... SHEET — DATE

APPROVED — DATE

LAS VIRGENES MWD / TRIUNFO CSD
TAPIA WRF - REGIONAL FACILITIES EXPANSION IV
FILTRATION / DISINFECTION ADDITION

EFFLUENT PUMP STATION - PLAN AND SECTION

SHEET 2M-1 OF 11 SHEETS

JOB NO. 870.01/3 FILE 8

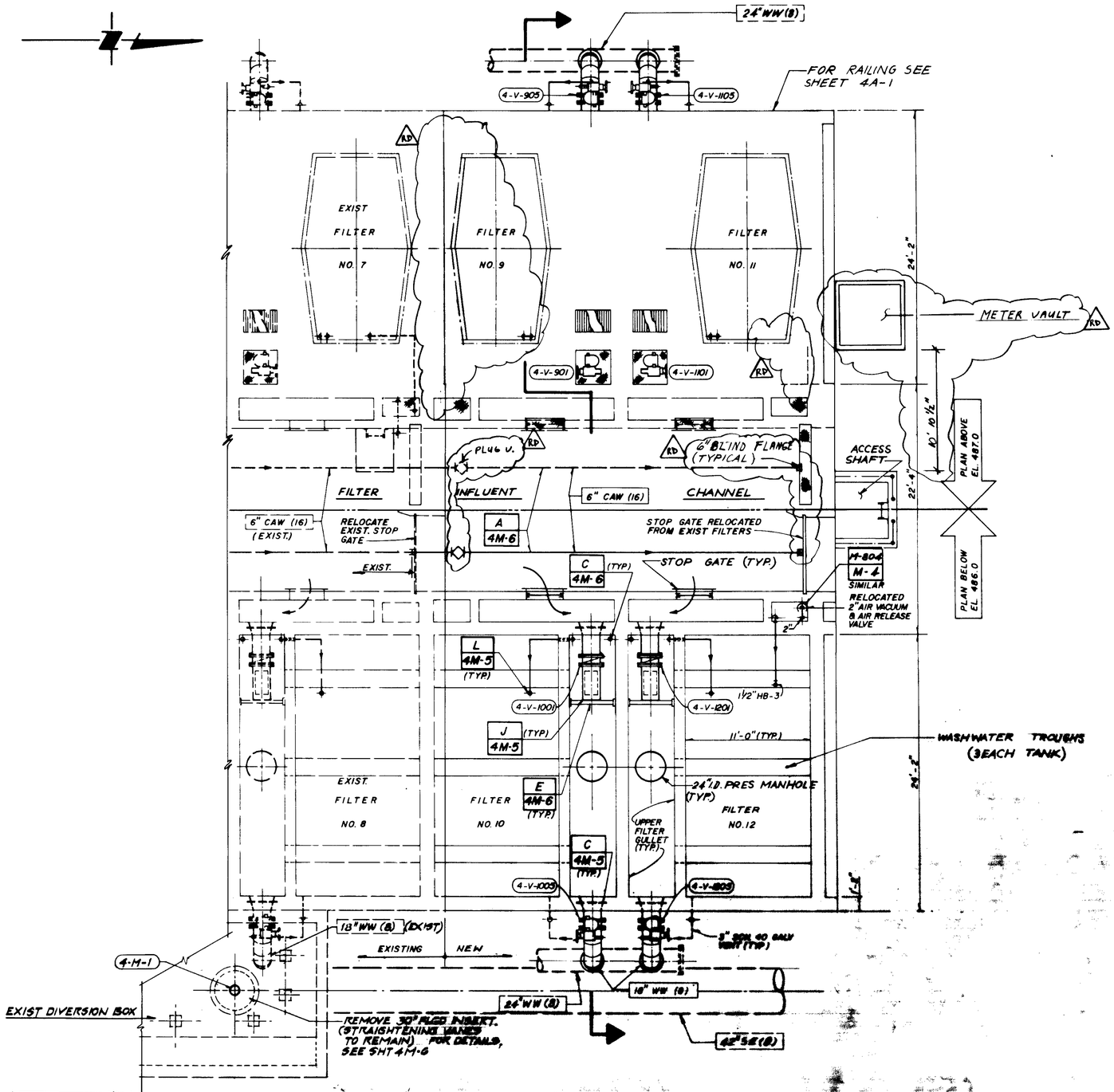

FILTER PLAN ABOVE 487.0, BELOW 486.0

SCALE: 1/16" = 1'-0"

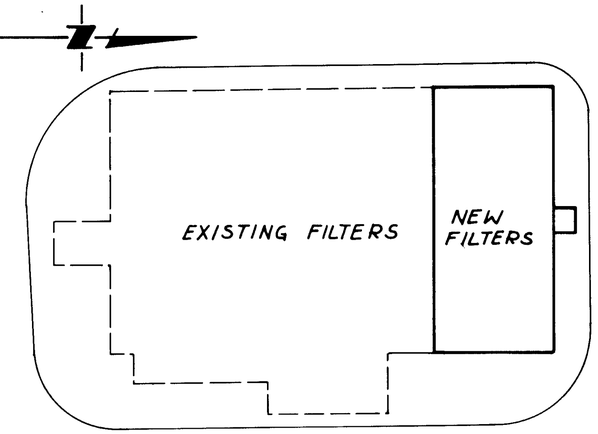

KEY PLAN

SCALE: 1" = 20'-0"

NOTE TO CONTRACTOR

REPLACE EXISTING AUMA ELECTRIC OPERATORS ON MODULATING EFFLUENT VALVES NOS 4-V-102 THRU 4-V-802 WITH LIMITORQUE ELECTRIC OPERATORS, SEE SPECS FOR MODEL ETC.

04744

SAMI A. DOUAIHY No. 25021 Exp. 6-30-95 CIVIL STATE OF CALIFORNIA REGISTERED PROFESSIONAL ENGINEER

PROJECT-RECORD DOCUMENT
C.W. Roen Const. Co.
P.O. 4, Danville, CA 94526
DATE: 2-11-94 By: [illegible]

REV	DATE	BY	DESCRIPTION
RD	2-11-94	[illegible]	AS-BUILT

SCALE: AS NOTED

WARNING: 0 1/8 1 — IF THIS BAR DOES NOT MEASURE 1" THEN DRAWING IS NOT TO SCALE.

DESIGNED [illegible] 4-10-90 11/20/90
DRAWN [illegible]
CHECKED S.D. [illegible]
SUBMITTED [illegible] 11/20/90

JMM James M. Montgomery Consulting Engineers, Inc. Pasadena, California

APPROVED DISTRICT APPROVAL ON COVERSHEET DATE
APPROVED DATE

LAS VIRGENES MWD / TRIUNFO CSD
TAPIA WRF - REGIONAL FACILITIES EXPANSION IV
FILTRATION / DISINFECTION ADDITION

SHEET [redacted] OF 11 SHEETS

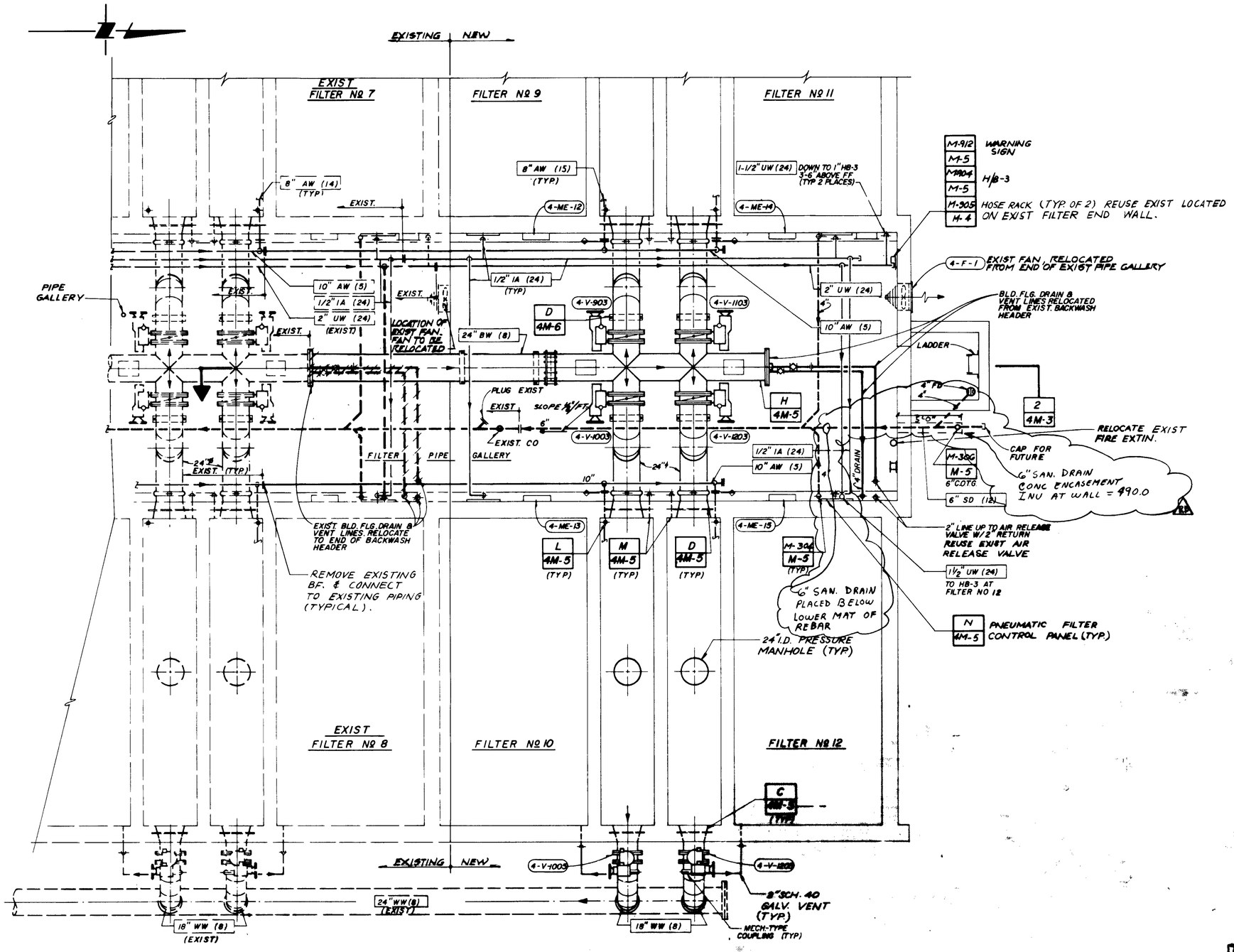

FILTER PLAN BELOW EL. 476.92

04745

PROJECT-RECORD DOCUMENT
C.W. Roen Const Co.
P.O. 4, Danville, CA 94526
DATE: 2-11-94 By: RCL

AS-BUILT RECORD DRAWING
THIS AS-BUILT RECORD DRAWING IS BASED ON INFORMATION PROVIDED BY THE CONTRACTOR. WE ASSUME NO RESPONSIBILITY FOR THE ACCURACY OF THE INFORMATION PROVIDED BY THE CONTRACTOR. THAT THE INFORMATION HAS BEEN TRANSFERRED TO THESE DRAWINGS FROM RECORD DRAWINGS AND WE ASSUME NO RESPONSIBILITY FOR THE ACCURACY OF THESE RECORD DRAWINGS.
DATE 04.21.94 BY: CONed

REGISTERED PROFESSIONAL ENGINEER SAMI A. DOUARA No. 29694 Exp. 6/30/95 MECHANICAL STATE OF CALIFORNIA

REV	DATE	BY	DESCRIPTION
RD	2-12-94	RCL	AS-BUILT

SCALE: 1/4" = 1'-0"

WARNING: 0 1/2 1 — IF THIS BAR DOES NOT MEASURE 1" THEN DRAWING IS NOT TO SCALE.

DESIGNED [redacted] DRAWN [redacted] CHECKED S. Douara

SUBMITTED Jose M. Roen PROJECT ENGINEER 41019 R.C.E. NO. 4/20/90 DATE
RECOMMENDED [redacted] CONSULTING ENGINEERING, INC. 31697 R.C.E. NO. 11/26/90 DATE

James M. Montgomery Consulting Engineers, Inc. Pasadena, California

APPROVED DISTRICT APPROVAL ON COVERSHEET DATE
APPROVED DATE

LAS VIRGENES MWD / TRUMPO CSD
TAPIA WRF - REGIONAL FACILITIES EXPANSION IV
FILTRATION / DISINFECTION ADDITION
[redacted]

SHEET [redacted] OF 110 SHEETS

JOB NO. 870.0313 FILE CC

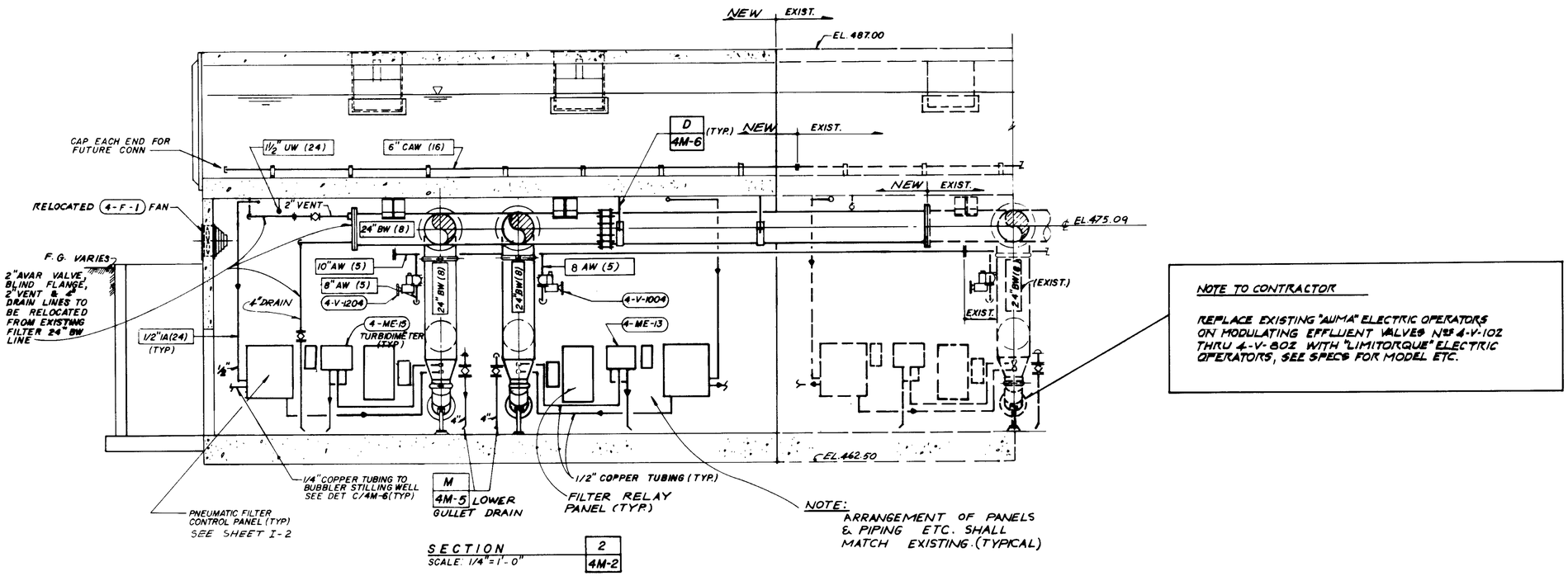

NOTE TO CONTRACTOR

REPLACE EXISTING "AUMA" ELECTRIC OPERATORS ON MODULATING EFFLUENT VALVES Nos 4-V-102 THRU 4-V-802 WITH "LIMITORQUE" ELECTRIC OPERATORS, SEE SPECS FOR MODEL ETC.

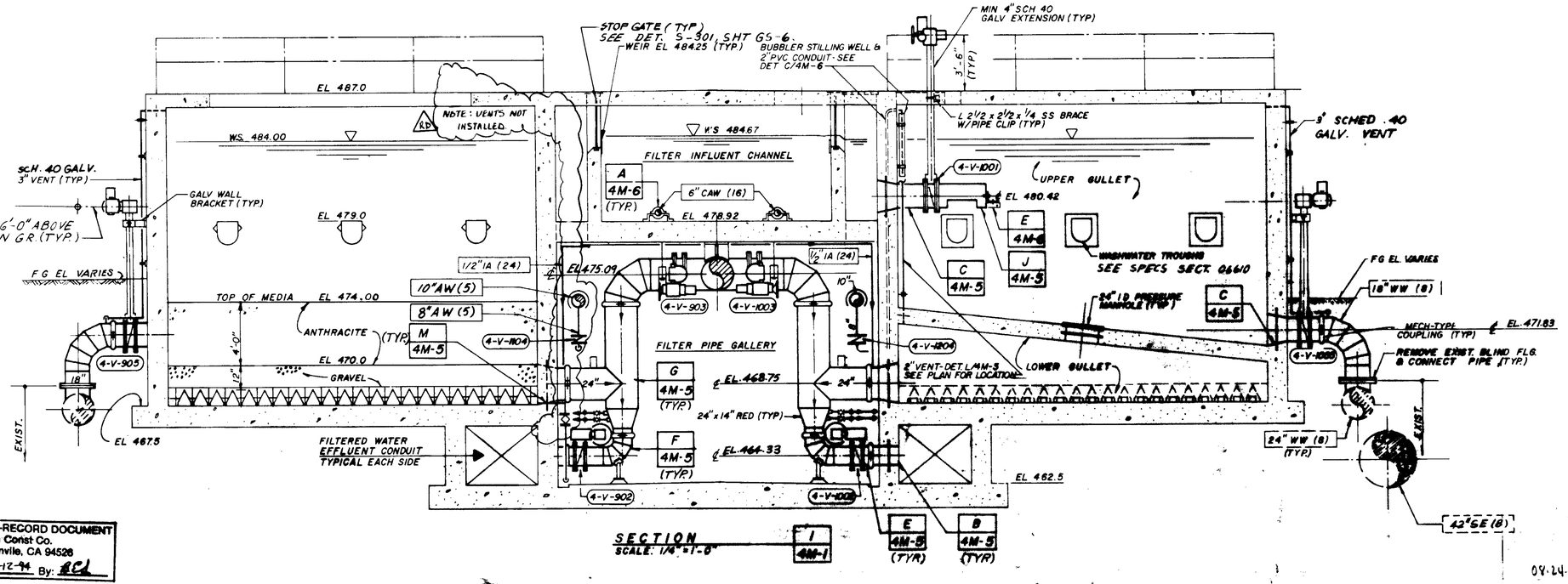

04746

08-24-94

PROJECT-RECORD DOCUMENT
C.W. Roen Const Co.
P.O. 4, Danville, CA 94526
DATE: 2-12-94 By: RCL

REV	DATE	BY	DESCRIPTION
RD	2-11-94	RCL	AS-BUILT

SCALE: AS NOTED

WARNING: 0 1/8 1 — IF THIS BAR DOES NOT MEASURE 1" THEN DRAWING IS NOT TO SCALE.

DESIGNED / DRAWN / CHECKED S. Douara

SUBMITTED: PROJECT ENGINEER — 41019 E.C.E. NO. — 11/26/90 DATE

RECOMMENDED: CONSULTING ENGINEER, INC. — 33499 E.C.E. NO. — 11/26/90 DATE

JMM James M. Montgomery Consulting Engineers, Inc. Pasadena, California

APPROVED: DISTRICT APPROVAL ON COVER SHEET — DATE

APPROVED — DATE

LAS VIRGENES MWD / TRIUNFO CSD
TAPIA WRF - REGIONAL FACILITIES EXPANSION IV
FILTRATION / DISINFECTION ADDITION

[redacted]

SHEET [redacted] OF 1 1 SHEETS

REGISTERED PROFESSIONAL ENGINEER — SAMI A. DOUARA — No. 25824 — Exp. 3/31/93 — MECHANICAL — STATE OF CALIFORNIA

JOB NO. 870.0373 FILE ____ CC ____

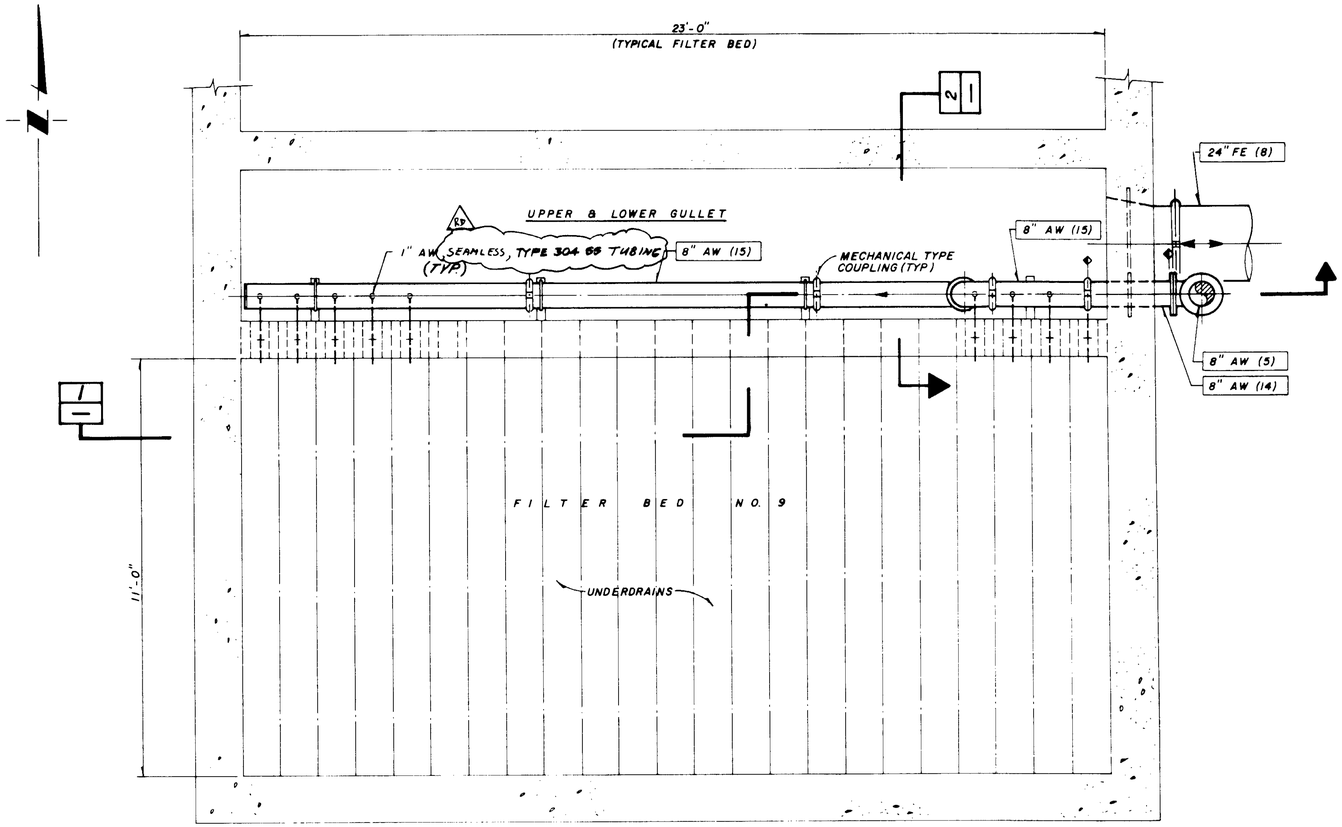

PLAN

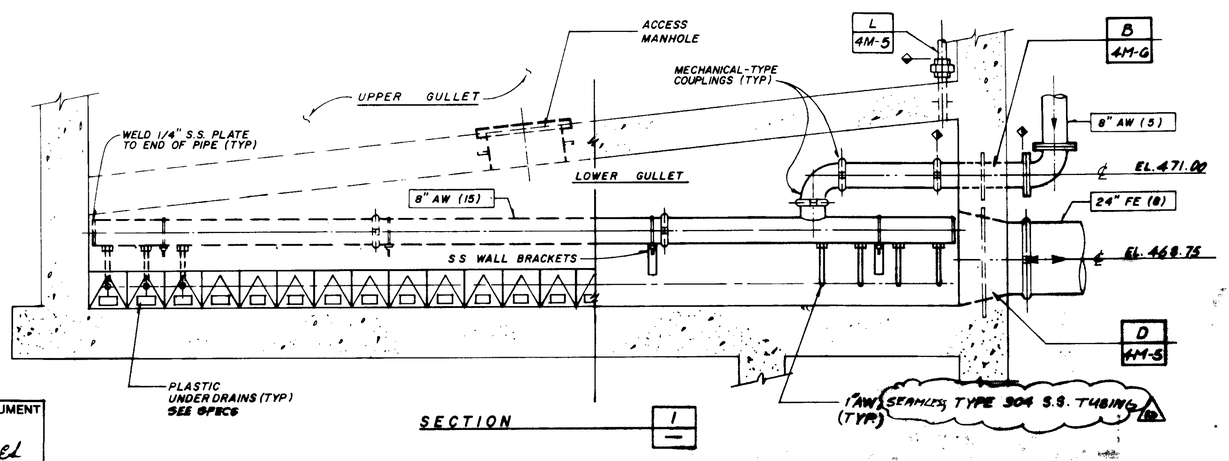

SECTION 1

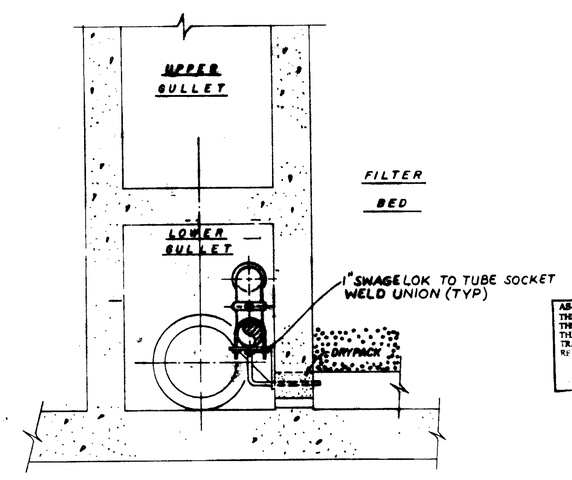

SECTION 2

AS-BUILT RECORD DRAWING
THESE AS-BUILT RECORD DRAWINGS ... SUBJECT INFORMATION ... TO THE CONTRACTOR ... CONTRACTOR MANAGER ... THAT THE INFORMATION ... PROVIDED BY OTHERS ... TRANSFERRED TO THESE ... DOCUMENTS ... DRAWINGS ARE ... OBTAIN INDEPENDENT ...
08.24.94

04747

REGISTERED PROFESSIONAL ENGINEER SAMI A. ... No. ... Exp. 6/30/93 MECHANICAL STATE OF CALIFORNIA

PROJECT-RECORD DOCUMENT
C.W. Roen Const Co.
P.O. 4, Danville, CA 94526
DATE: 2-12-94 By: RED

REV	DATE	BY	DESCRIPTION
RD	2-12-94	RED	AS-BUILT

SCALE: 1/2"=1'-0"

WARNING: 0 1/2 1 — IF THIS BAR DOES NOT MEASURE 1" THEN DRAWING IS NOT TO SCALE.

DESIGNED: [illegible] DRAWN: [illegible] CHECKED: S. Dasgupta

SUBMITTED: Jorge M. Pacas, PROJECT ENGINEER — 41019 R.C.E. NO. — 11/26/90 DATE
RECOMMENDED: [illegible], CONSULTING ENGINEER, INC. — 33679 R.C.E. NO. — 11/26/90 DATE

James M. Montgomery Consulting Engineers, Inc. Pasadena, California

APPROVED: [illegible] DATE
APPROVED: DATE

LAS VIRGENES MWD / TRUNFO CSD
TAPIA WRF - REGIONAL FACILITIES EXPANSION IV
FILTRATION / DISINFECTION ADDITION

SHEET [redacted] OF 110 SHEETS

JOB NO. 0701-003 FILE CC

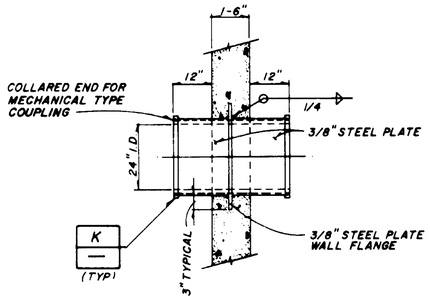

STEEL WALL PIPE THIMBLE | A | 4M-2

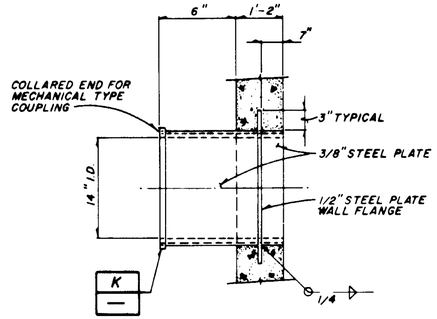

STEEL WALL PIPE THIMBLE | B | 4M-3

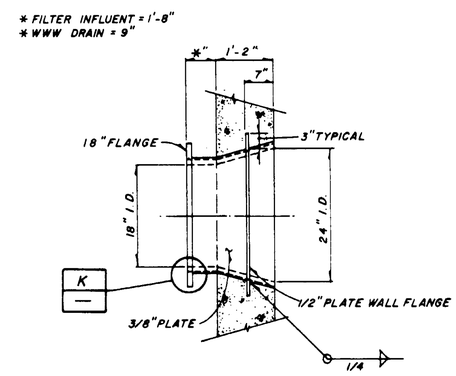

STEEL WALL PIPE THIMBLE | C | 4M-1 | C | 4M-2 | C | 4M-3

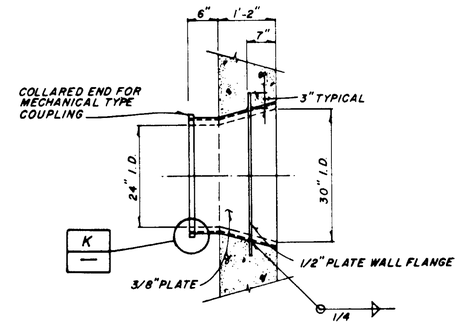

STEEL WALL PIPE THIMBLE | D | 4M-2 | D | 4M-4

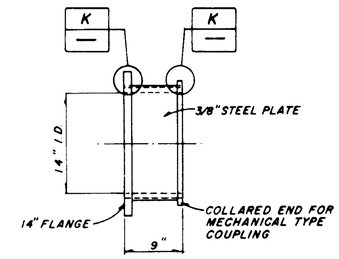

STEEL PIPE SPOOL | E | 4M-3

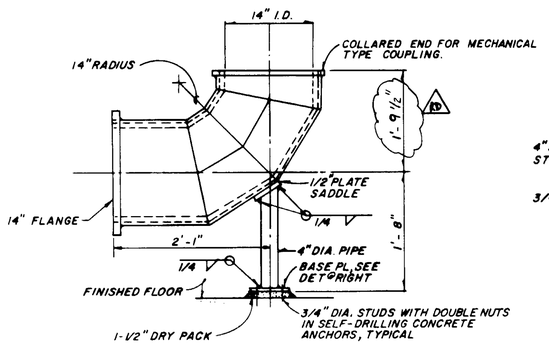

FABRICATED 90° ELBOW SUPPORT | F | 4M-2 | F | 4M-3

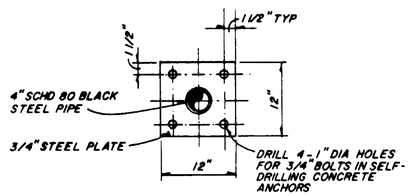

BASE PLATE DETAIL

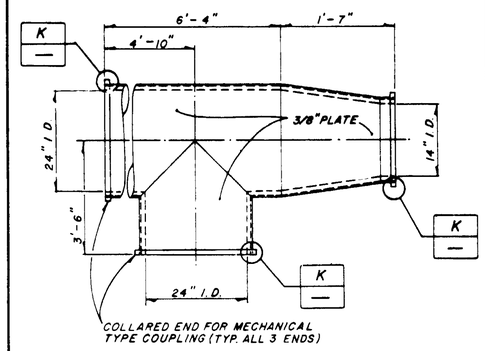

FABRICATED REDUCING TEE | G | 4M-3

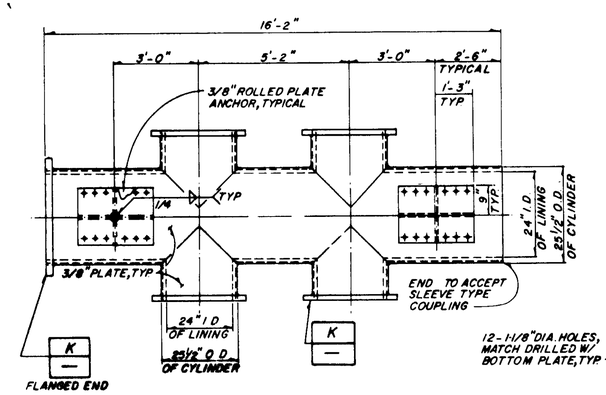

BACKWASH HEADER | H | 4M-2

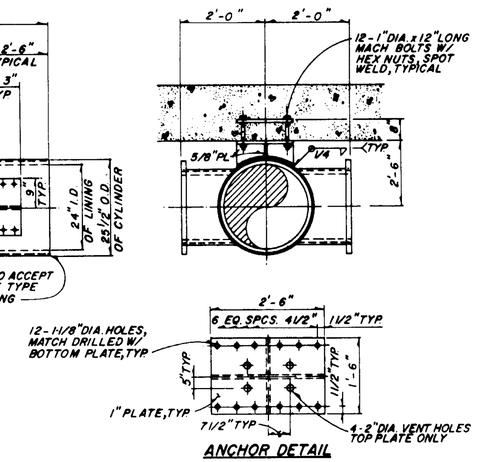

ANCHOR DETAIL

NOTE: GALVANIZE AFTER FABRICATION

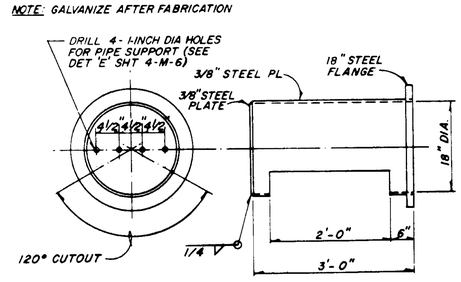

PROJECT-RECORD DOCUMENT
C.W. Roen Const Co.
P.O. 4 Danville, CA 94526
DATE: 2-12-94 By: BCL

ENERGY DISSIPATOR | J | 4M-1 | J | 4M-3

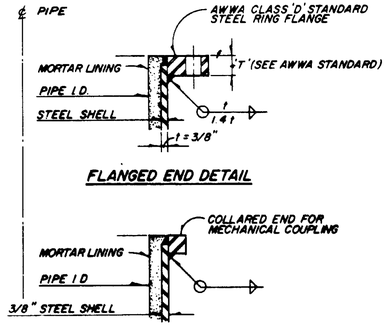

FLANGED END DETAIL

COLLARED END DETAIL

FLANGED AND COLLARED END | K | —

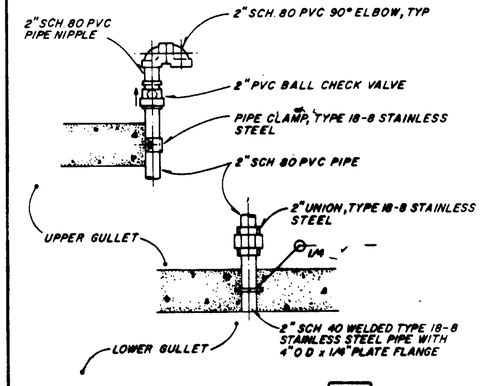

LOWER GULLET VENT | L | VAR.

NOTE
GALVANIZE ASSEMBLY AFTER FABRICATION

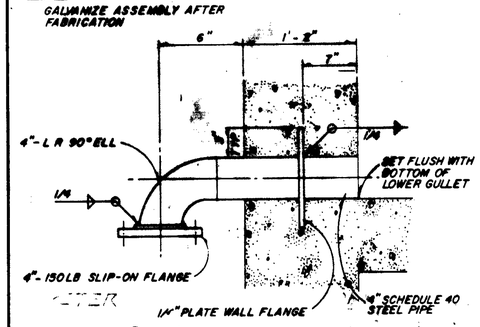

LOWER GULLET DRAIN | M | 4M-3 | M | 4M-2

AS-BUILT RECORD DRAWING REPLACES THESE AS-BUILT RECORD DRAWINGS PREPARED BY THE CONTRACTOR FURNISHED BY OTHERS. THAT THE INFORMATION FURNISHED BY OTHERS WAS TRANSFERRED TO THESE DRAWINGS AS ACCURATELY AS POSSIBLE. THE RECORD DRAWINGS ARE BASED ON THE INFORMATION OF THESE ACCURACY IS BEYOND THE CONTROL OF THE ENGINEER. DATE 01-24-94 BY: CONEL

REGISTERED PROFESSIONAL ENGINEER
SAMI A. DOUARA
No. 25824
Exp. 6/30/93
MECHANICAL
STATE OF CALIFORNIA

04748

REV	DATE	BY	DESCRIPTION
RD	2-12-94	BCL	AS-BUILT

SCALE: NONE

WARNING: 0 1/2 1 — IF THIS BAR DOES NOT MEASURE 1" THEN DRAWING IS NOT TO SCALE.

DESIGNED / DRAWN / CHECKED

SUBMITTED: PROJECT ENGINEER — 41019 R.C.E. NO. — 11/26/90 DATE

RECOMMENDED: JAMES M. MONTGOMERY CONSULTING ENGINEERS, INC. — 33699 R.C.E. NO. — 11/26/90 DATE

JMM James M. Montgomery Consulting Engineers, Inc. Pasadena, California

APPROVED: DISTRICT ENGINEER — DATE

APPROVED — DATE

LAS VIRGENES MWD / TRUNFO CSD
TAPIA WRF - REGIONAL FACILITIES EXPANSION IV
FILTRATION / DISINFECTION ADDITION

SHEET [redacted] OF 11 SHEETS

JOB NO. 670.0213 FILE CC

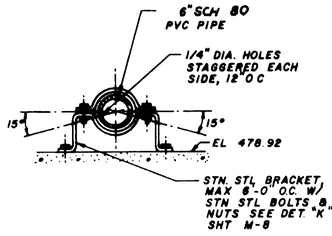

DIFFUSER HEADER | A | A
4M-1 | 4M-3

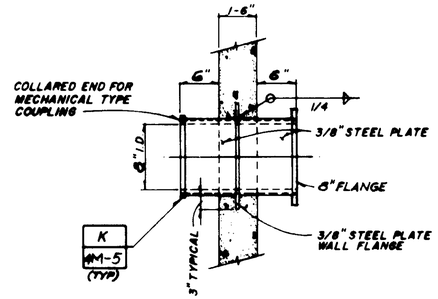

STEEL WALL PIPE THIMBLE | B
4M-4

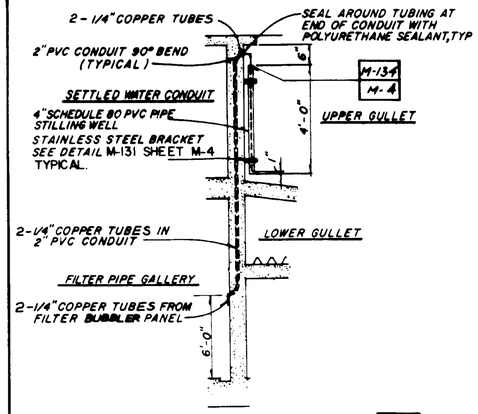

BUBBLER STILLING WELL DETAIL | C
4M-1

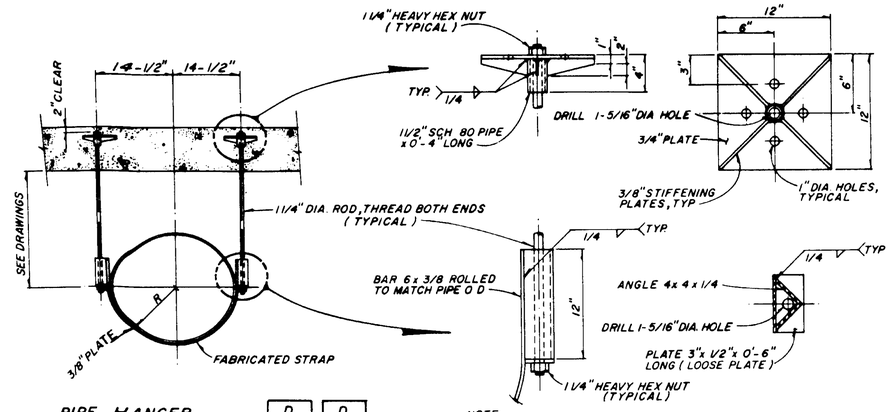

PIPE HANGER | D | D
4M-2 | 4M-3

NOTE:
GALVANIZE RODS AND STRAP AFTER FABRICATION.

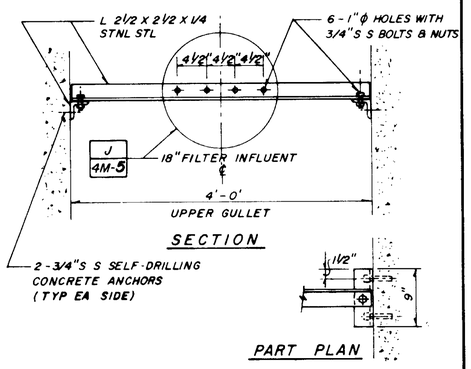

ENERGY DISSIPATOR SUPPORT | E | E
4M-1 | 4M-3

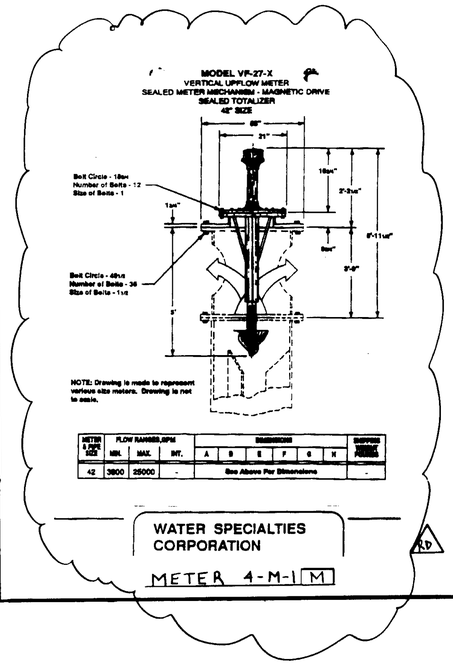

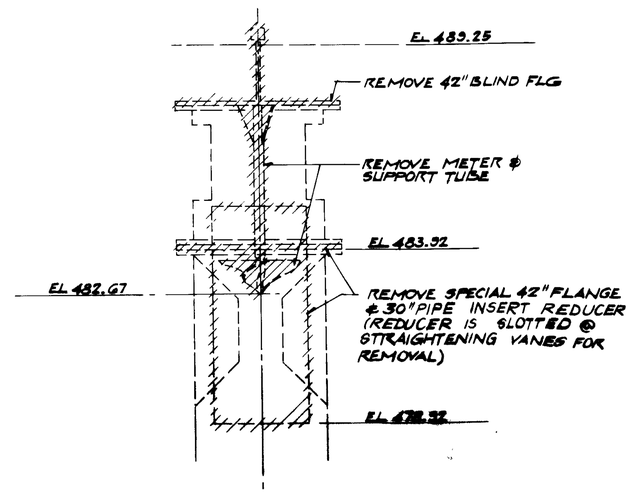

METER REMOVAL DETAIL

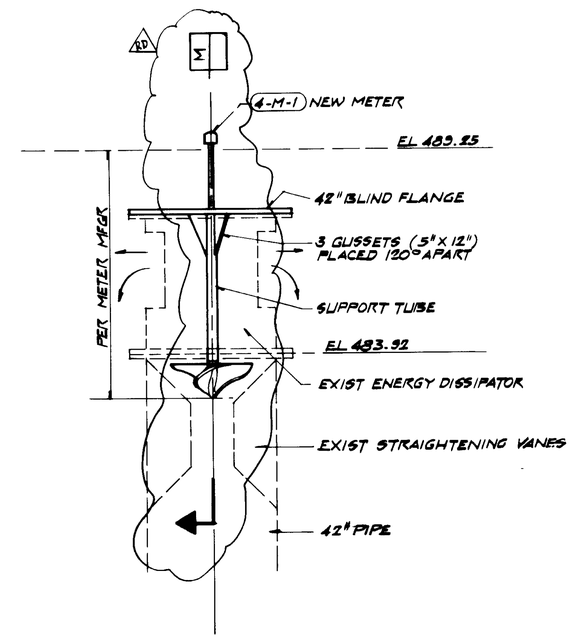

METER INSTALLATION DETAIL

NOTE:
FOR LOCATION SEE SHT 4M-1

04749

METER 4-M-1 MODIFICATIONS

SCALE: 1/4" = 1'-0"

AS-BUILT RECORD DRAWING
THESE AS-BUILT RECORD DRAWINGS REFLECT ... THE CONTRACTOR. THE CONSULTING ENGINEER ... THAT THE INFORMATION FURNISHED ... TRANSFERRED TO THESE RECORD DOCUMENTS ... RECORD DRAWINGS ARE ANY LEGS CONTAINS ... OF THEIR ACCURACY BUT WE ARE UNAWARE OF ANY REASON.
DATE 08-24-94 BY C-ONE

REGISTERED PROFESSIONAL ENGINEER
SAMI A. DOUARA
No. 25824
Exp. 6/30/93
MECHANICAL
STATE OF CALIFORNIA

PROJECT-RECORD DOCUMENT
C.W. Roen Const Co.
P.O. 4, Danville, CA 94526
DATE: 2-12-91 BY: BEL

REV	DATE	BY	DESCRIPTION
RD	2-11-91	BEL	AS-BUILT

SCALE: NONE

WARNING: 0 1/2 1 — IF THIS BAR DOES NOT MEASURE 1" THEN DRAWING IS NOT TO SCALE.

DESIGNED
DRAWN
CHECKED S. Douara

SUBMITTED
PROJECT ENGINEER — R.C.E. NO. 4019 — DATE 11/26/90

RECOMMENDED
JAMES M. MONTGOMERY CONSULTING ENGINEERS, INC. — R.C.E. NO. 33699 — DATE 11/26/90

JMM James M. Montgomery
Consulting Engineers, Inc.
Pasadena, California

APPROVED
DISTRICT APPROVAL CONSTRUCTION — DATE

APPROVED — DATE

LAS VIRGENES MWD / TRUMPO CSD
TAPIA WRF - REGIONAL FACILITIES EXPANSION IV
FILTRATION / DISINFECTION ADDITION

SHEET [redacted] OF 110 SHEETS

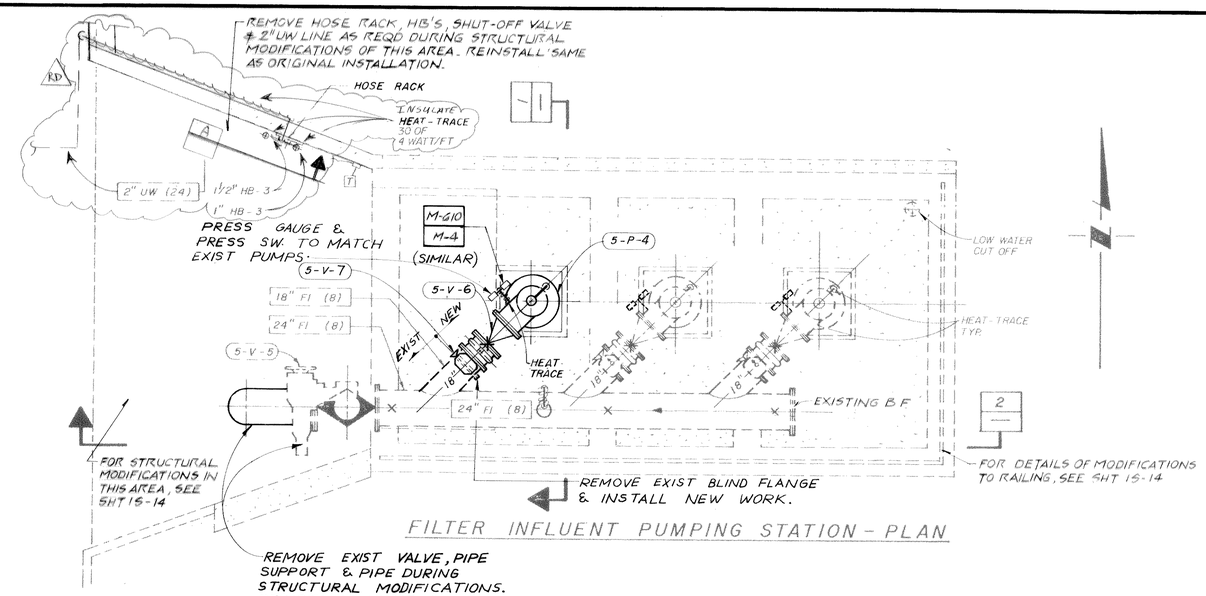

FILTER INFLUENT PUMPING STATION - PLAN

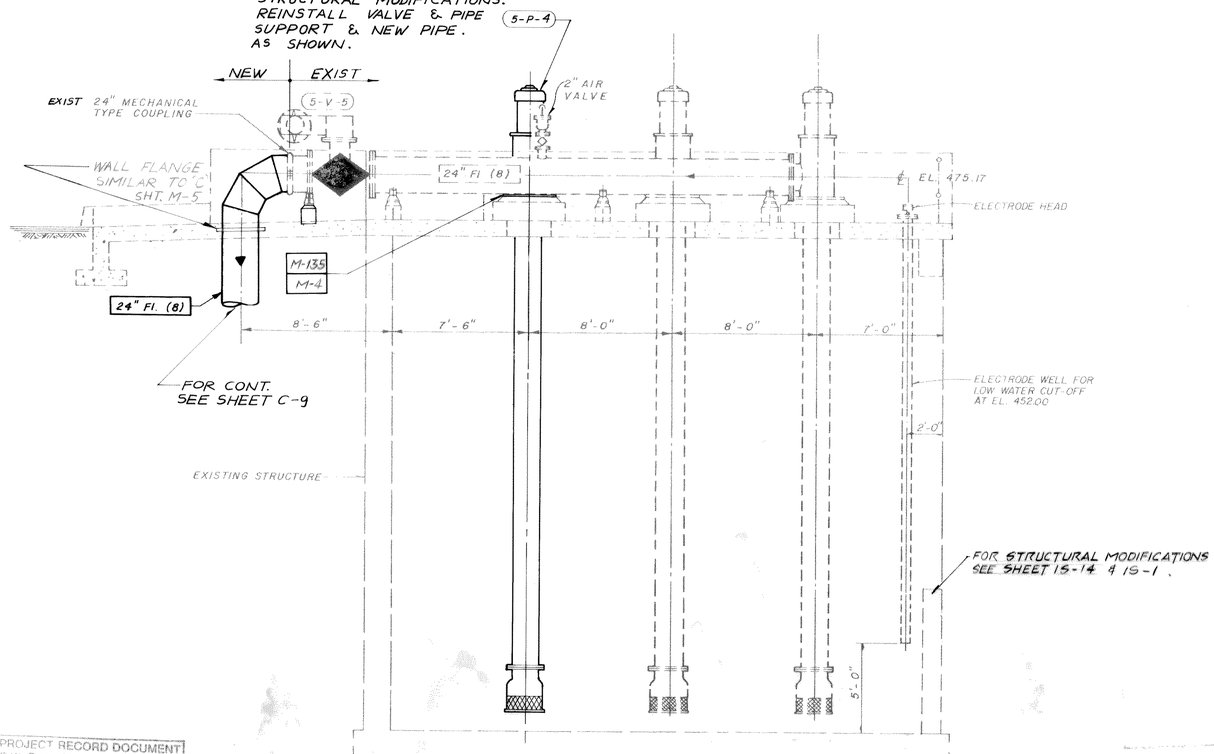

SECTION 2

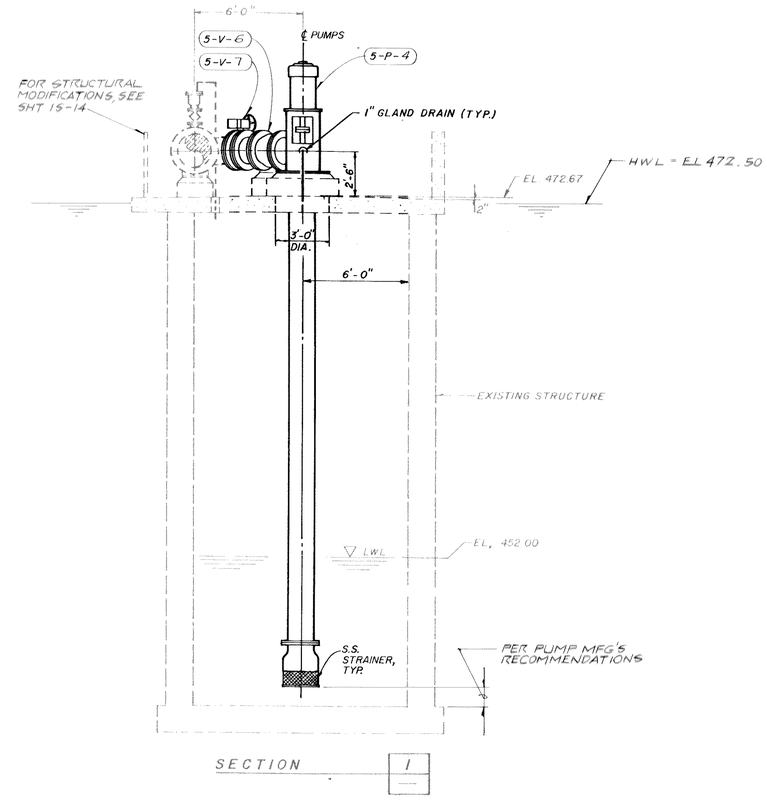

SECTION 1

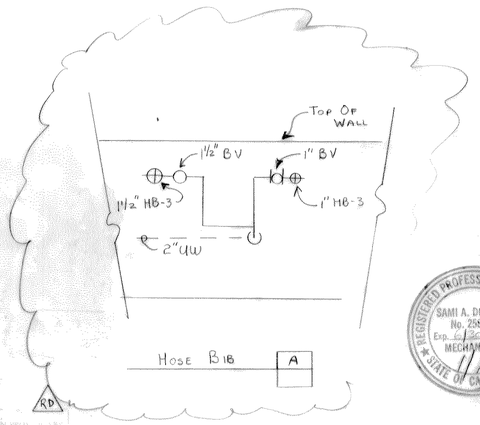

NOTE TO CONTRACTOR:
EXISTING STRUCTURE SHALL BE MODIFIED AS SHOWN IN THE STRUCTURAL DRAWING 15-14

PROJECT RECORD DOCUMENT
C.W. Roen Const Co.
P.O. 4 Danville, CA 94526
DATE: 2-12-94 By: RD

REV	DATE	BY	DESCRIPTION
RD	2-12-94	RD	AS-BUILT

SCALE: 1/4"=1'-0"

WARNING: 0 1/2 1 — IF THIS BAR DOES NOT MEASURE 1" THEN DRAWING IS NOT TO SCALE.

DESIGNED / DRAWN / CHECKED S. Douara

SUBMITTED — PROJECT ENGINEER — R.C.E. NO. 41019 — DATE 11/26/90

RECOMMENDED — JAMES M. MONTGOMERY CONSULTING ENGINEERS, INC. — R.C.E. NO. 23699 — DATE 11/26/90

JMM James M. Montgomery Consulting Engineers, Inc. Pasadena, California

APPROVED — DISTRICT APPROVAL — DATE

APPROVED — DATE

LAS VIRGENES MWD / TRIUNFO CSD
TAPIA WRF - REGIONAL FACILITIES EXPANSION IV
FILTRATION / DISINFECTION ADDITION

FILTER INFLUENT PUMP STATION - PLAN AND SECTION

04750

SHEET 5M-1 OF 110 SHEETS

JOB NO. 870-0213 FILE CC

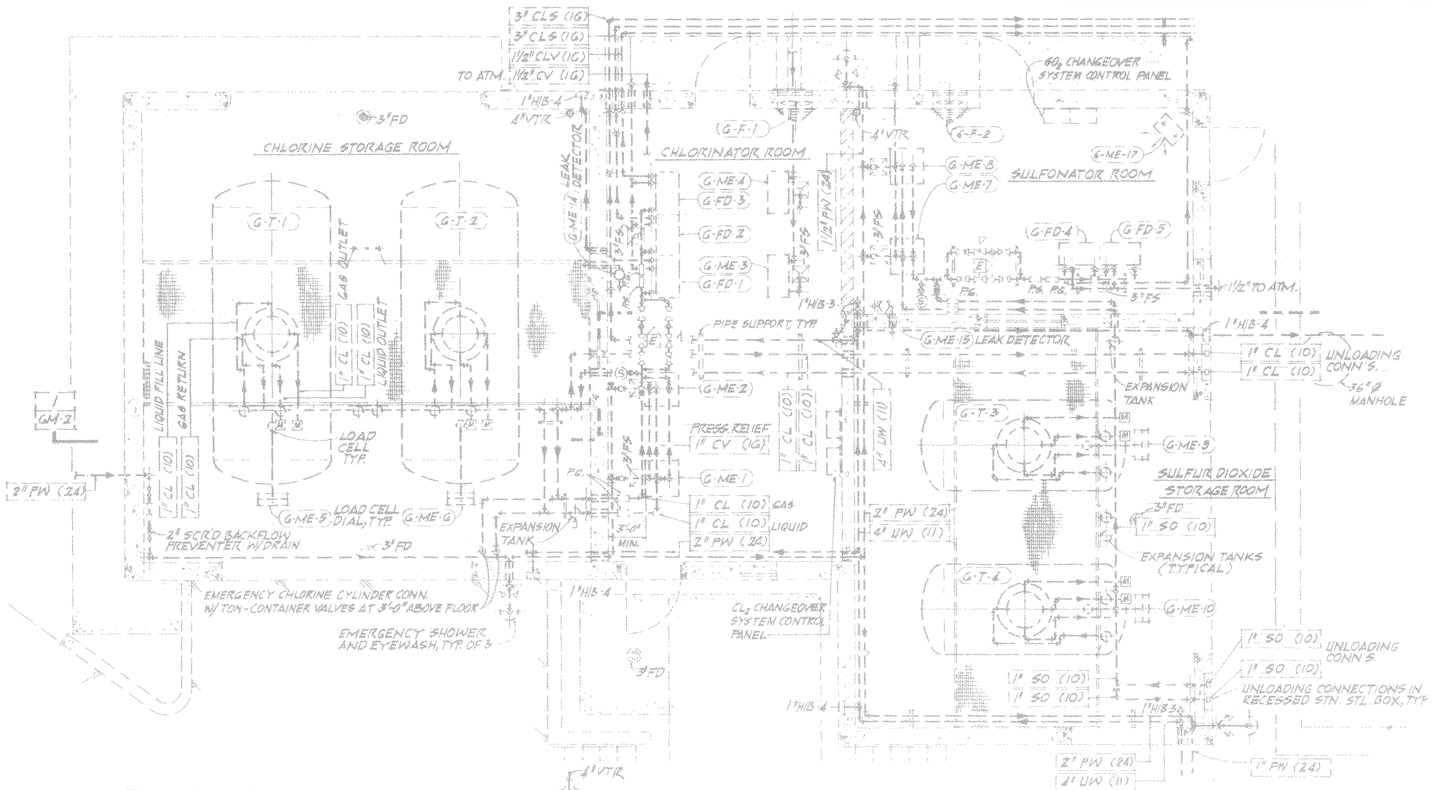

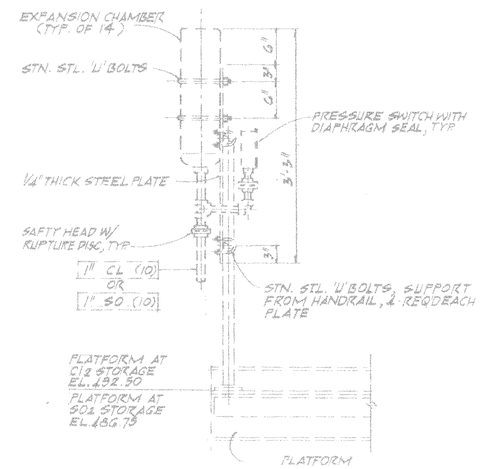

EXPANSION CHAMBER MOUNTING DETAIL
SCALE = 1"=1'-0"

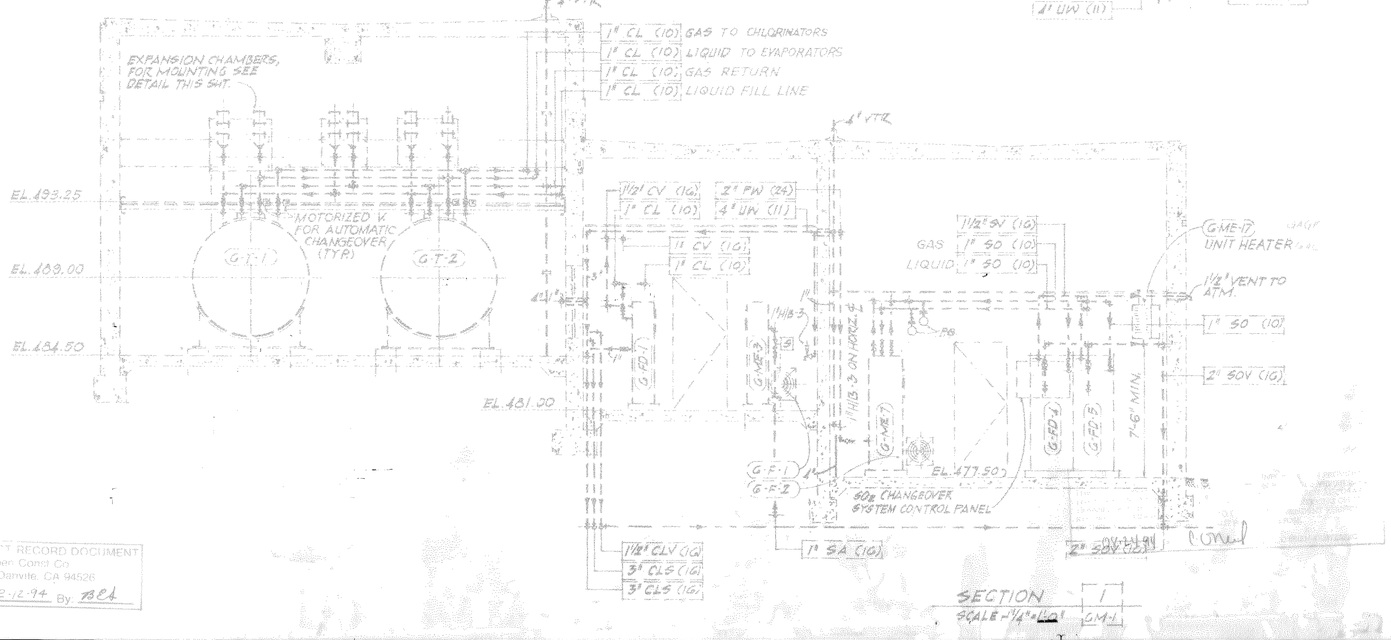

SECTION 1
SCALE = 1/4"=1'-0"

NOTE TO CONTRACTOR

ALL THE FACILITIES INCLUDING PIPING SHOWN IN THIS DRAWING ARE EXISTING. THEY ARE PRESENTED TO INDICATE THE LEVEL OF DIFFICULTY THE CONTRACTOR WILL ENCOUNTER INSIDE THE CHEMICAL BUILDING.
THE CONTRACTOR SHALL FIELD VERIFY BEFORE CONSTRUCTION, THE EXISTING CONDITIONS AND PROPOSED PIPING ALIGNMENT.

PROJECT RECORD DOCUMENT
C.W. Roen Const Co
P.O. 4, Danville, CA 94526
DATE: 2-12-94 By: TBCA

REV	DATE	BY	DESCRIPTION
	2-12-94	TBCA	AS-BUILT RECORD DRAWING

SCALE:

WARNING: 0 1/2 1 — IF THIS BAR DOES NOT MEASURE 1" THEN DRAWING IS NOT TO SCALE.

DESIGNED
DRAWN
CHECKED S. Douara

SUBMITTED — PROJECT ENGINEER — R.C.E. NO. 41019 — DATE 11/26/90
RECOMMENDED — JAMES M. MONTGOMERY CONSULTING ENGINEERS, INC. — R.C.E. NO. 32699 — DATE 11/26/90

JMM James M. Montgomery Consulting Engineers, Inc.
Pasadena, California

APPROVED — DISTRICT APPROVAL ON OVERHEAD — DATE
APPROVED — DATE

LAS VIRGENES MWD / TRIUNFO CSD
TAPIA WRF - REGIONAL FACILITIES EXPANSION IV
FILTRATION / DISINFECTION ADDITION

CHEMICAL BUILDING EXISTING PIPING

SHEET 6M-1 OF 110 SHEETS

JOB NO. 570.023 FILE CC

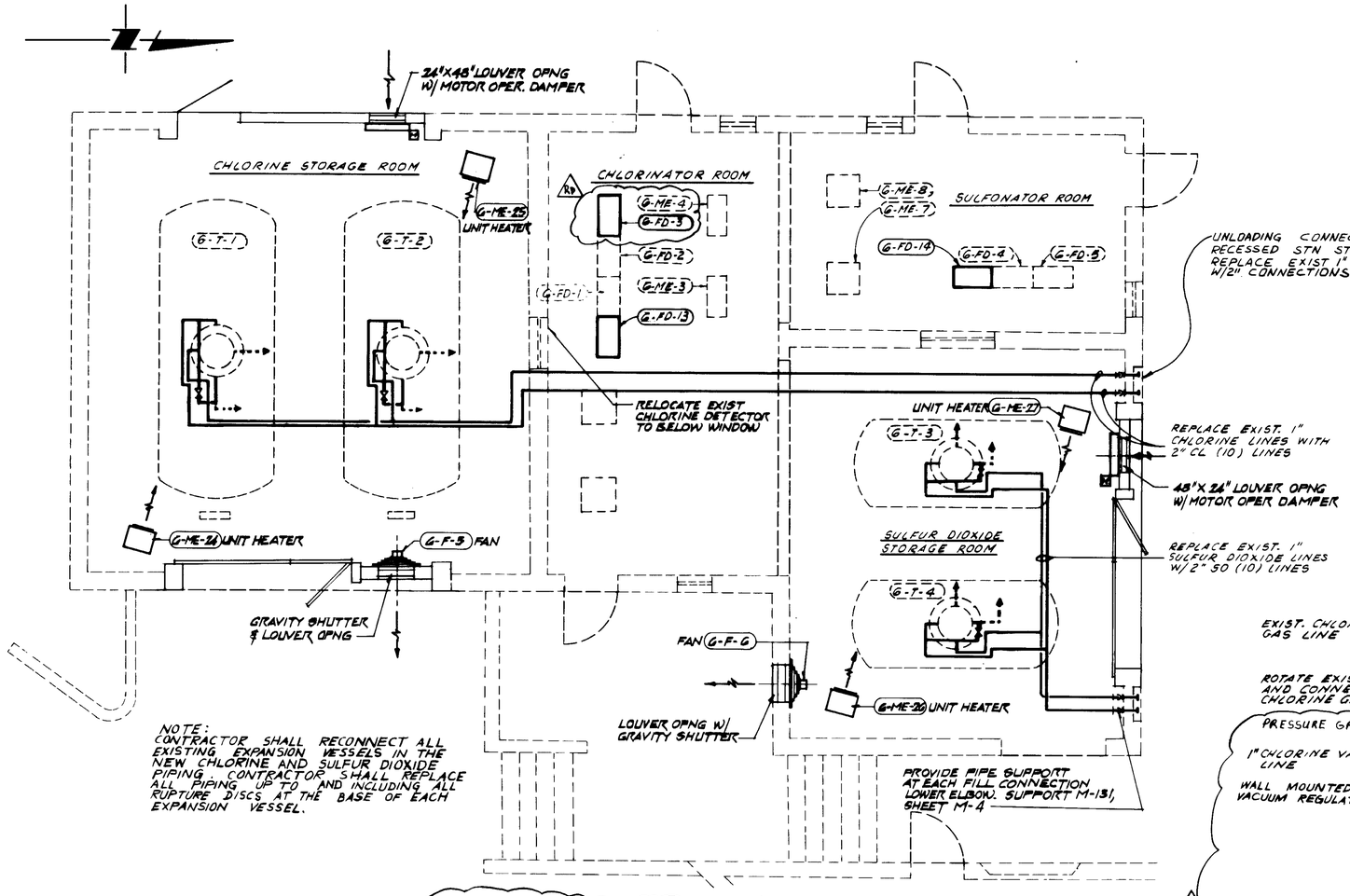

NOTE:
CONTRACTOR SHALL RECONNECT ALL EXISTING EXPANSION VESSELS IN THE NEW CHLORINE AND SULFUR DIOXIDE PIPING. CONTRACTOR SHALL REPLACE ALL PIPING UP TO AND INCLUDING ALL RUPTURE DISCS AT THE BASE OF EACH EXPANSION VESSEL.

CHEMICAL BUILDING PARTIAL PLAN

SCALE: 1/4" = 1'-0"

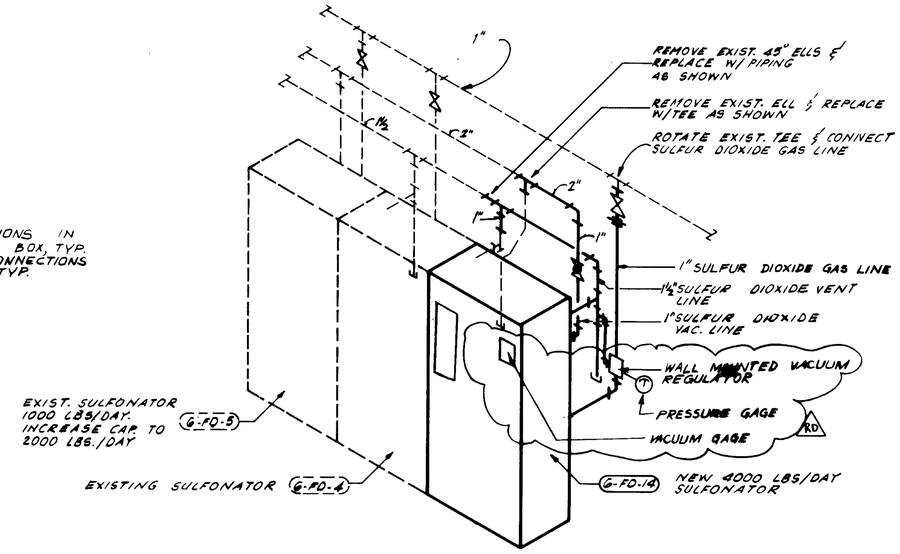

SULFUR DIOXIDE SYSTEM MODIFICATIONS

SCALE = NONE

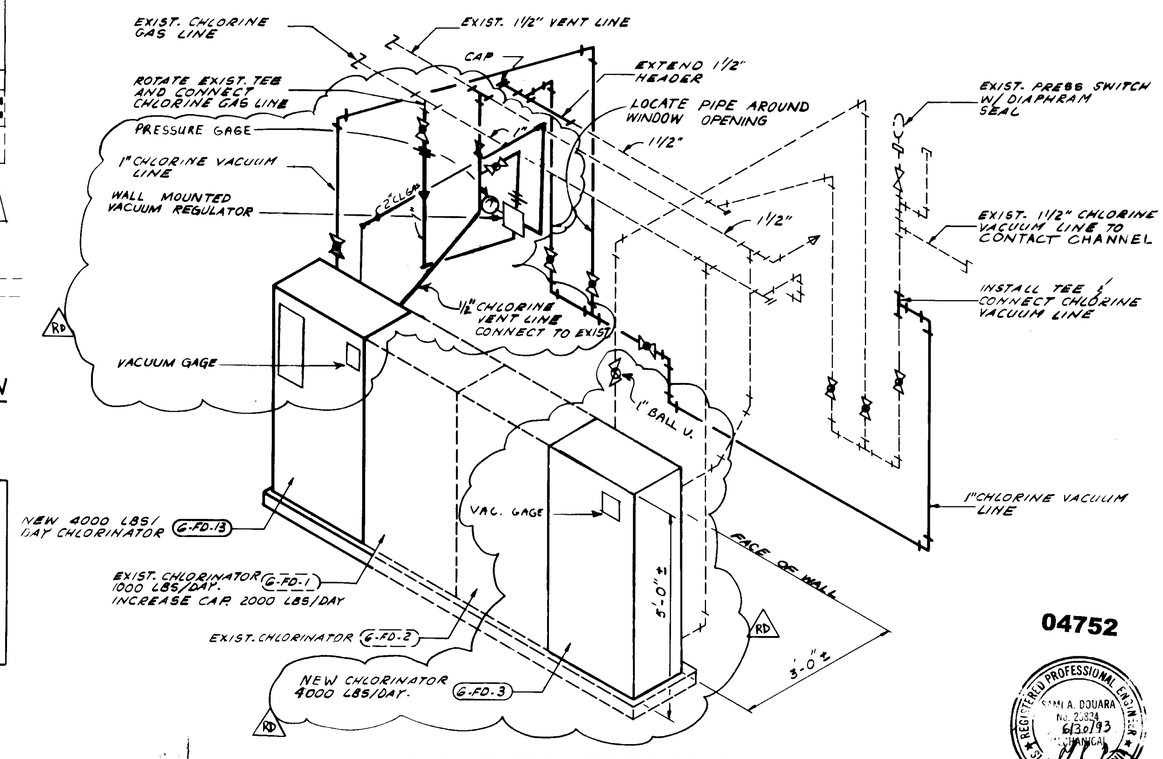

CHLORINE SYSTEM MODIFICATIONS

SCALE = NONE

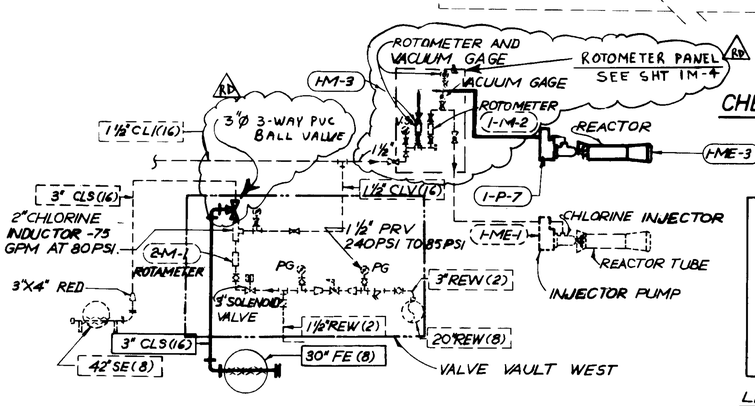

CHLORINATION SCHEMATIC

NO SCALE

NOTE TO CONTRACTOR.

FOR EXISTING PIPING SEE SHEET 6M-1, CONTRACTOR SHALL VERIFY LOCATION OF EXISTING PIPING AND ALIGNMENT OF PROPOSED PIPING. PROPOSED PIPING TO FOLLOW SAME ALIGNMENT AND SLOPE AS EXISTING. SUPPORT FOR ALL PIPING SYSTEMS SHALL BE PROVIDED AS REQUIRED.

LEGEND:

- - - - - - EXISTING

——— NEW

09.24.94

04752

REGISTERED PROFESSIONAL ENGINEER — SAM A. DOUARA No. 23824 6/30/93 CHANGAL — STATE OF CALIFORNIA

PRELIMINARY RECORD DOCUMENT
C.W. Rice Const Co.
P.O. Box Danville, CA 94526
DATE: 2-12-94 By: RCL

REV	DATE	BY	DESCRIPTION
RD	2-12-94	RCL	AS-BUILT

SCALE: AS NOTED

WARNING: 0 1/2 1 — IF THIS BAR DOES NOT MEASURE 1" THEN DRAWING IS NOT TO SCALE.

DESIGNED [illegible] DRAWN [illegible] CHECKED S. Douara

SUBMITTED [illegible] PROJECT ENGINEER — 41019 R.C.E. NO. — 11/26/90 DATE

RECOMMENDED [illegible] JAMES M. MONTGOMERY CONSULTING ENGINEERS, INC. — 33699 R.C.E. NO. — 11/26/90 DATE

James M. Montgomery Consulting Engineers, Inc. Pasadena, California

APPROVED [illegible] DATE

APPROVED [illegible] DATE

LAS VIRGENES MWD / TRIUNFO CSD
TAPIA WRF - REGIONAL FACILITIES EXPANSION IV
FILTRATION / DISINFECTION ADDITION

SHEET [illegible] OF 110 SHEETS

JOB NO. 870.02/3 FILE CC

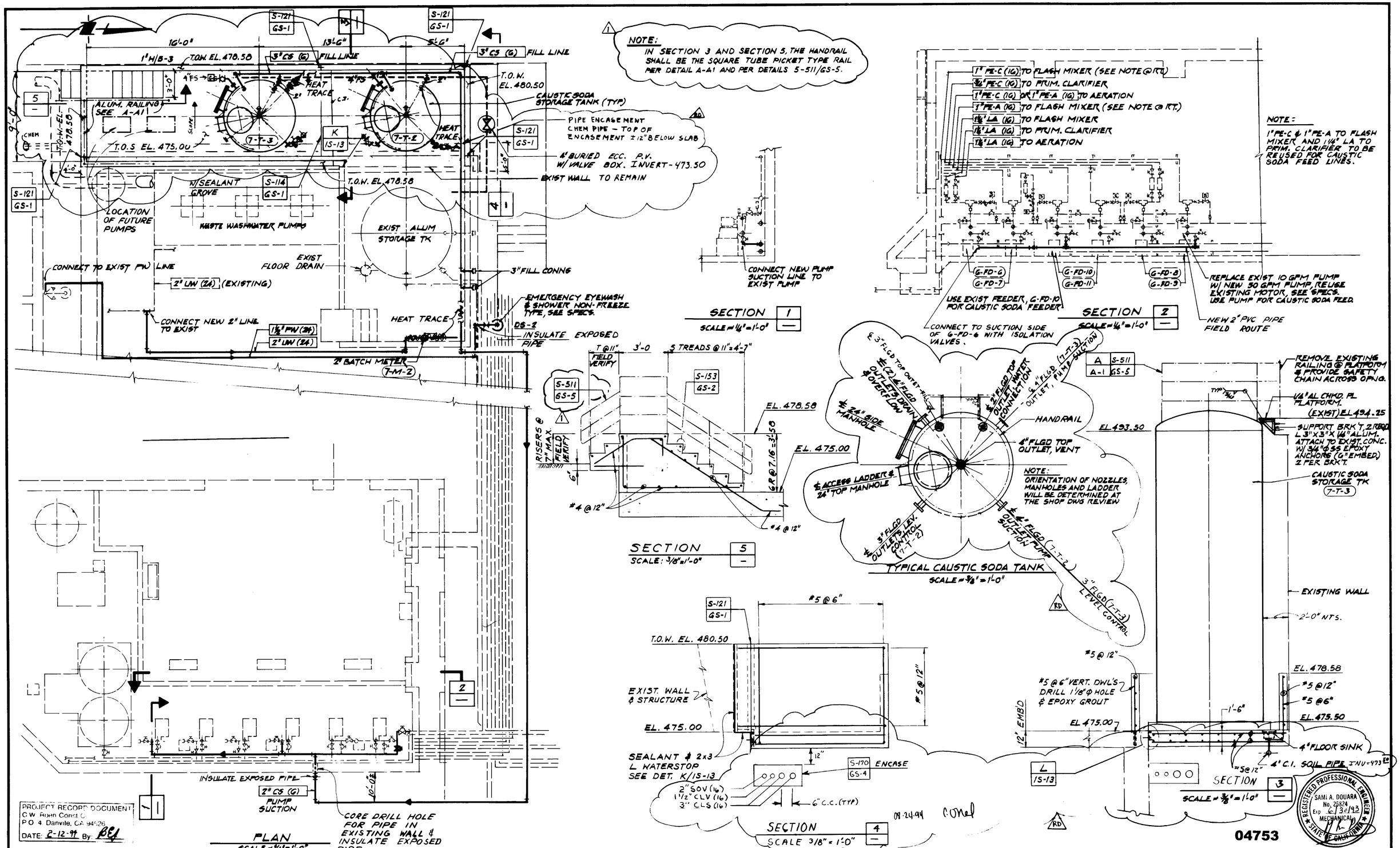

REV	DATE	BY	DESCRIPTION
RD			AS BUILT - RECORD DRAWING
1	4.25.91	M.B.J.	AS BID

SCALE: AS NOTED

WARNING: 0 1/2 1 — IF THIS BAR DOES NOT MEASURE 1" THEN DRAWING IS NOT TO SCALE.

DESIGNED / DRAWN / CHECKED: S. Douara

SUBMITTED: PROJECT ENGINEER — 41019 R.C.E. NO. — 11/26/90 DATE

RECOMMENDED: JAMES M. MONTGOMERY CONSULTING ENGINEERS, INC. — 33699 R.C.E. NO. — 11/26/90 DATE

JMM James M. Montgomery Consulting Engineers, Inc. Pasadena, California

APPROVED: ~~DISTRICT APPROVAL ON COVER SHEET~~ DATE

APPROVED: DATE

LAS VIRGENES MWD / TRUNFO CSD
TAPIA WRF - REGIONAL FACILITIES EXPANSION IV
FILTRATION / DISINFECTION ADDITION

CHEMICAL BUILDING - CAUSTIC SODA TANKS

SHEET [redacted] OF 110 SHEETS

JOB NO. 870.013 FILE CC

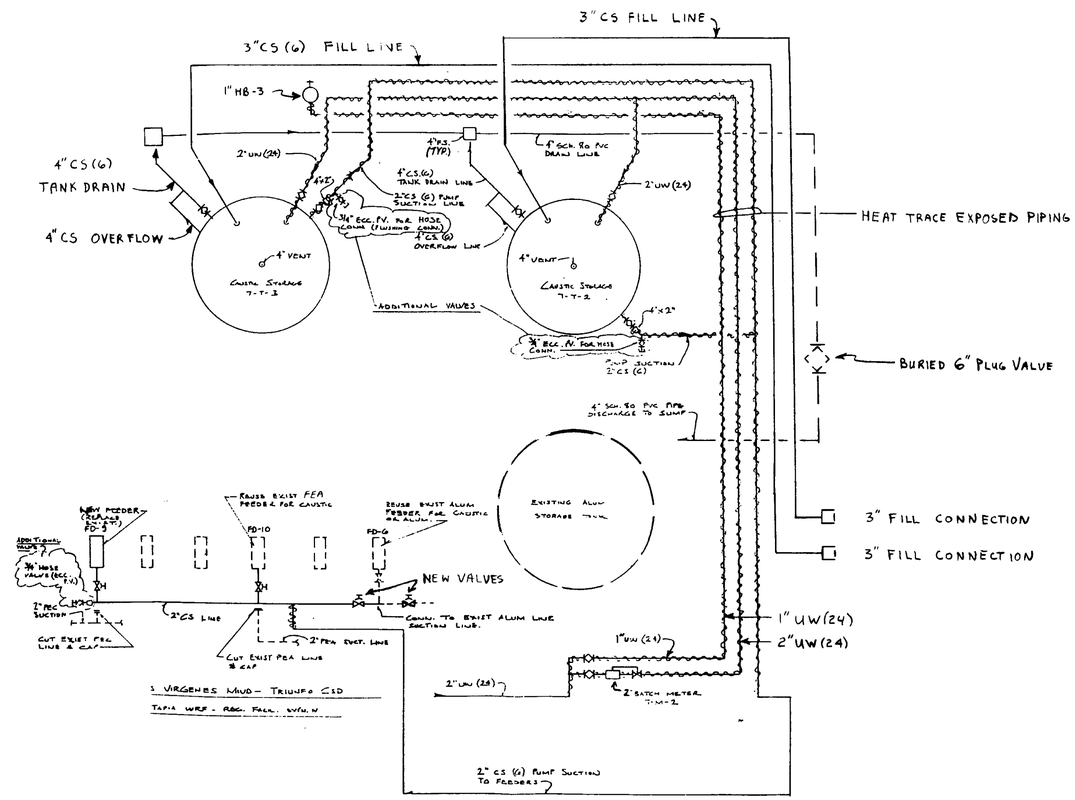

[redacted] Conel

04754

PROJECT-RECORD DOCUMENT
C.W. Roen Const Co.
P.O. 4 Danville, CA 94526
DATE: 2-12-94 By: BCL

LAS VIRGENES MWD / TRIUNFO CSD
TAPIA WRF - REGIONAL FACILITIES EXPANSION IV
FILTRATION / DISINFECTION ADDITION

[redacted] TANKS

SHEET [redacted] (A)
OF [redacted] SHEETS

PRINTED ON NO. 1000H CLEARPRINT

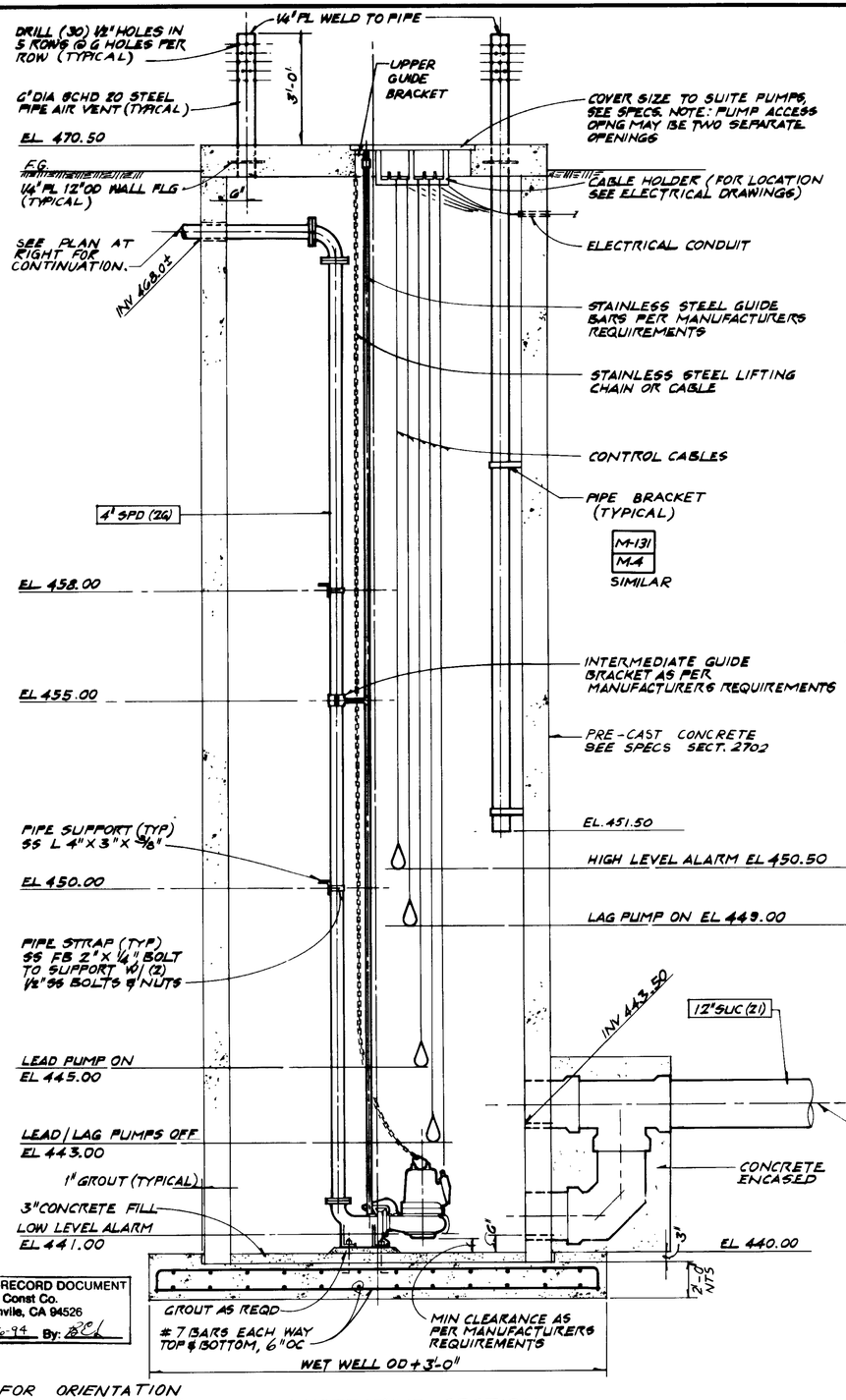

ILLUSTRATIVE SECTION

PROJECT-RECORD DOCUMENT
C.W. Roen Const Co.
P.O. 4, Danville, CA 94526
DATE: 2-16-94 By: RBL

NOTE: FOR ORIENTATION AND LOCATION SEE SHT C-2

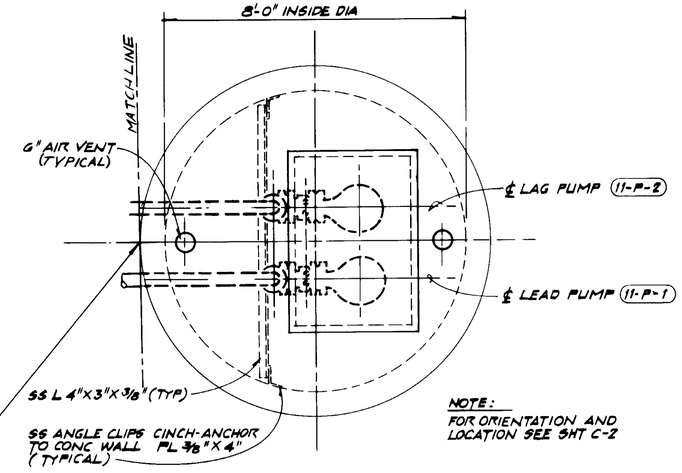

NOTE:
FOR ORIENTATION AND LOCATION SEE SHT C-2

DRAINAGE PUMP STATION - PLAN

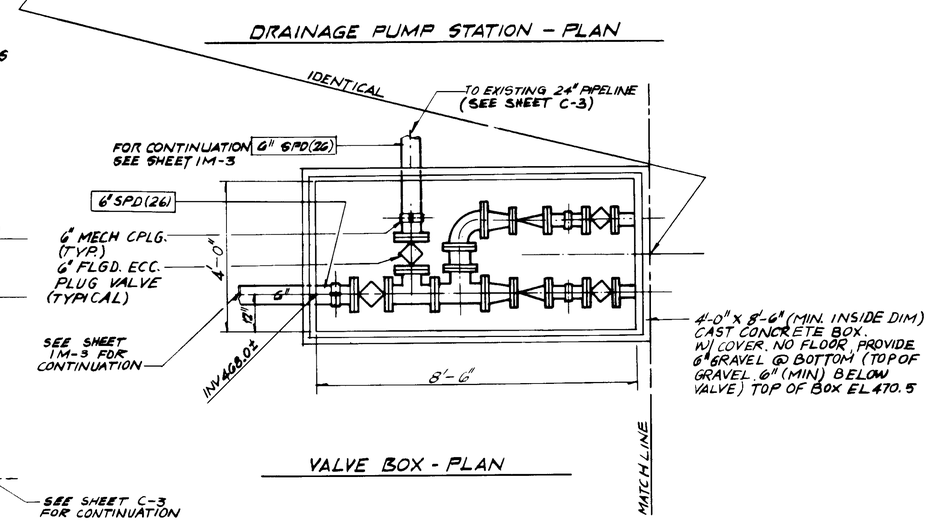

VALVE BOX - PLAN

NOTE:
INSTALL DISTRICT FURNISHED PROPELLER TYPE FLOWMETERS IN BOTH DISCHARGE LINES FROM THE PLANT DRAIN PUMP STATION.

RD

08-14-94 C. O'Neal

04755

REGISTERED PROFESSIONAL ENGINEER
SAMIR A. DOUARA
No. 23614
Exp. 6/30/95
MECHANICAL
STATE OF CALIFORNIA

REV	DATE	BY	DESCRIPTION
RD	2-6-94	RBL	AS-BUILT

SCALE: 1/2" = 1'-0"

WARNING: 0 1/2 1 — IF THIS BAR DOES NOT MEASURE 1" THEN DRAWING IS NOT TO SCALE.

DESIGNED / DRAWN / CHECKED S. Douara

SUBMITTED: Carl M. Roen — PROJECT ENGINEER — R.C.E. NO. 41019 — DATE 11/26/90

RECOMMENDED: JAMES M. MONTGOMERY, CONSULTING ENGINEERS, INC. — R.C.E. NO. 33699 — DATE 11/28/90

JMM James M. Montgomery Consulting Engineers, Inc. Pasadena, California

APPROVED: DISTRICT APPROVAL ON COVER SHEET — DATE

APPROVED — DATE

LAS VIRGENES MWD / TRUNFO CSD
TAPIA WRF - REGIONAL FACILITIES EXPANSION IV
FILTRATION / DISINFECTION ADDITION

DRAINAGE PUMP STATION - PLAN AND SECTION

SHEET 11M-1 OF 110 SHEETS

JOB NO. 870.023 FILE CC

S Y M B O L S

P L A N

- GROUND BUS
- EXPOSED CONDUIT
- CONDUIT CONCEALED ABOVE FLOOR.
- CONDUIT RUN UNDERGROUND OR IN CONCRETE
- EXPOSED CONDUIT RUN BEHIND OBSTRUCTION
- BARE COPPER GROUND TO GROUND WIRE IN SLAB, OR UNDERGROUND GROUND GRID. SIZE AS NOTED.
- (T) UNDERGROUND TELEMETRY CONDUIT
- LPI-1, 3, 7 — HOME RUN TO PANEL. "LPI". CIRCUITS #1, 3, 7. CROSS MARKS INDICATE NUMBER OF CONDUCTORS, LONGER MARK INDICATES NEUTRAL. CONDUCTORS SHALL BE NO. 12 UNLESS OTHERWISE NOTED. CONDUIT SHALL BE 3/4", UNLESS OTHERWISE NOTED. CONDUIT SIZES NOT IDENTIFIED SHALL BE 3/4"Ø MINIMUM WITH 2 #12. G INDICATES GROUND WIRE
- T — TELEPHONE CONDUIT ONLY. "UNLESS OTHERWISE NOTED".
- CONDUIT RUN - CHANGE IN ELEVATION
- CONDUIT BENDS TOWARD OBSERVER
- CONDUIT BENDS AWAY FROM OBSERVER
- CONDUIT CAPPED, OR SEALED
- FLEXIBLE LIQUID - TIGHT CONDUIT CONNECTION
- IM - 1 — INDICATES CONDUIT NUMBER FROM MCC "IM" "1" INDICATES FEEDER NO.
- 2a — CEILING OR PENDANT INCANDESCENT, MERCURY VAPOR, OR SIMILAR LAMP FIXTURE. "2" INDICATES CIRCUIT NUMBER. "a" INDICATES FIXTURE CONTROLLED BY SWITCH "a".
- WALL BRACKET INCANDESCENT, MERCURY VAPOR, OR SIMILAR LAMP FIXTURE WITH EXPOSED BACK BOX AND CONDUIT.
- WALL BRACKET FLOOD OR SPOTLIGHT WITH CONCEALED BACK BOX AND CONDUIT.
- I — POLE MOUNTED FIXTURE DISTRIBUTION TYPE AS INDICATED ON PLAN
- A 2/40 3 — FIXTURE TYPE A. 2-40 WATT LAMPS 3 - NUMBER OF TYPE "A" FIXTURES
- FLUORESCENT LIGHTING FIXTURE, UNSWITCHED (SWITCHED AT LIGHTING PANEL ONLY)
- E — FLUORESCENT LIGHTING FIXTURE ON EMERGENCY CIRCUIT
- FLUORESCENT LIGHTING FIXTURE
- BATTERY EMERGENCY LIGHT FIXTURE
- $a — SINGLE POLE SWITCH. "a" INDICATES CIRCUIT CONTROLLED
- $2 — DOUBLE POLE SWITCH
- $3 — THREE-WAY SWITCH
- $4 — FOUR-WAY SWITCH
- $K — KEY-OPERATED SWITCH
- $P — SWITCH AND PILOT LIGHT
- $M — MANUAL MOTOR STARTER
- $WP — WEATHERPROOF SWITCH

WALL	FLOOR	
		120V SINGLE RECEPTACLE. NEMA CONFIGURATION 5-20.
		120V DUPLEX RECEPTACLE. NEMA CONFIGURATION 5-20
		240V DUPLEX RECEPTACLE. NEMA CONFIGURATION 6-20
		SINGLE SPECIAL-PURPOSE RECEPTACLE. ASTERISK INDICATES NUMBER, SUCH AS AMPERAGE. TO DIFFERENTIATE BETWEEN TWO OR MORE DIFFERENT TYPES. 120 OR 240 V.A.C.
		WELDING RECEPTACLE
		SINGLE SPECIAL PURPOSE RECEPTACLE 480 V.A.C.
		CLOCK HANGER RECEPTACLE
		LIGHTING PANEL
		POWER PANEL
		MOTOR CONTROL CENTER
		FLOOR TYPE TELEPHONE OUTLET
		SOUND OR PAGING SYSTEM DEVICE. * DENOTES NUMBER TO DIFFERENTIATE BETWEEN DIFFERENT DEVICES.
		PUBLIC TELEPHONE SYSTEM DEVICE
		PRIVATE TELEPHONE (ANY TYPE) SYSTEM DEVICE
		GROUND ROD AND GROUND WELL
		GROUND CONNECTION BOLTED TYPE
		DISCONNECT SWITCH
		MOTOR STARTER
	M	MOTOR
	SS	PUSHBUTTON STATION "SS" START-STOP. "LOS" LOCKOUT-STOP. "SLOS" START-LOCKOUT-STOP
	JB	RACEWAY BOX "JB" JUNCTION BOX "MH" MANHOLE "HH" HANDHOLE "PB" PULLBOX "TB" TERMINAL BOX
	J	JUNCTION BOX OR FITTING
	PSL-1	FIELD INSTRUMENT I.E. "PSL" PRESSURE SWITCH "LSH" LEVEL SWITCH "SV" SOLENOID VALVE
	SV	SOLENOID VALVE
	T	THERMOSTAT
	H	HEATER
		HORN
	1	DENOTES REFERENCE TO NOTE 1 I.E. - "SEE NOTE 1"
		GROUND ROD 3/4" x 10' - 0" (UNLESS OTHERWISE NOTED)
		GROUND CONNECTION - EXOTHEMIC TYPE
	M	MOTOR OPERATED VALVE

S I N G L E L I N E D I A G R A M

- BUS
- II — ACROSS-THE-LINE, NON-REVERSING NEMA SIZE 2 MAGNETIC STARTER
- IV FW — NEMA SIZE 4 MAGNETIC STARTER: FW - PART WINDING, REV - REVERSING RV - REDUCED VOLTAGE, AUTO-AUTO TRANSFORMER 2SP-2W - TWO SPEED, TWO WINDING
- 30A — CONTACTOR, SIZE AS NOTED
- VACUUM TYPE CONACTOR
- 50A OR 225AF 125AT — MOLDED CASE CIRCUIT BREAKER, 3 POLE UNLESS OTHERWISE NOTED: 50A.-TRIP RATING IN AMPERE NA-NON-AUTOMATIC MCP - MOTOR CIRCUITPROTECTOR AF-FRAME SIZE (225 AMPS NOTED) AT-TRIP RATING (125 AMPS NOTED)
- 52 — MEDIUM OR HIGH VOLTAGE DRAWOUT BREAKER
- DRAWOUT BREAKER, SIZE AS NOTED EO - DENOTES ELECTRICALLY OPERATED
- MEDIUM OR HIGH VOLTAGE STARTER
- SURGE ARRESTOR
- 10 — MOTOR 10 HP NOTED
- TRANSFORMER WITH GROUNDED SECONDARY, KVA SIZE & VOLTAGE RATIO AS NOTED.
- PT 480/120V (2) — POTENTIAL TRANSFORMER, RATIO AND NUMBER OF PT'S AS NOTED
- CT 100/5 (3) — CURRENT TRANSFORMER, RATIO AND NUMBER OF CT'S AS NOTED
- I — ELECTRICAL INTERLOCK
- ELECTRICAL ENCLOSURE OUTLINE
- MOV — ELECTRICAL MOTOR OPERATED VALVE, WITH INTEGRAL REVERSING STARTER
- DISCONNECT SWITCH, SIZE AS NOTED
- FUSED DISCONNECT SWITCH
- 10 KVAR — CAPACITOR, KVAR AS NOTED
- KWH DM — KILOWATTHOUR METER WITH DEMAND REGISTER
- AM — AMMETER
- VM — VOLTMETER
- PF — POWER FACTOR METER
- VAR — VARMETER
- AS — AMMETER SWITCH
- VS — VOLTMETER SWITCH

S C H E M A T I C D I A G R A M

- CONTROL RELAY OR COIL — EXAMPLE: TD2 TIME DELAY RELAY NO. 2; CR1 CONTROL RELAY; 1M STARTER NO. 1 MAIN COIL
- N.O. CONTACT
- N.C. CONTACT
- TORQUE SWITCH (SPECIFY WHEN OPEN)
- NORMALLY OPEN LIMIT SWITCH
- NORMALLY CLOSED LIMIT SWITCH
- FLOAT TYPE LIQUID LEVEL SWITCH, CLOSING ON RISING LEVEL
- FLOAT TYPE LIQUID LEVEL SWITCH, OPENING ON RISING LEVEL
- VACUUM OR PRESSURE SWITCH, CLOSING ON RISING PRESSURE
- VACUUM OR PRESSURE SWITCH, OPENING ON RISING PRESSURE
- TEMPERATURE ACTUATED SWITCH; CLOSING ON RISING TEMPERATURE
- TEMPERATURE ACTUATED SWITCH; OPENING ON RISING TEMPERATURE
- FLOW SWITCH (AIR, WATER, ETC.); CLOSING ON FLOW INCREASE
- FLOW SWITCH (AIR, WATER, ETC.); OPENING ON FLOW INCREASE
- NORMALLY OPEN PUSHBUTTON, MOMENTARY CLOSE
- NORMALLY CLOSED PUSHBUTTON, MOMENTARY OPEN
- NO/NC MAINTAINED PUSHBUTTON
- ON OFF — TWO-POSITION SELECTOR SWITCH: H-HAND, M-MANUAL, R-REMOTE, L-LOCAL, A-AUTOMATIC, O-OFF
- H O A — THREE-POSITION SELECTOR SWITCH. (SAME AS ABOVE)
- THREE-POSITION SPRING RETURN-TO-CENTER MOMENTARY CONTACT SWITCH ("LATCH-UNLATCH," "ON-OFF," ETC.)
- SINGLE POLE TOGGLE SWITCH ("ON-OFF", ETC.)
- GROUND CONNECTION
- OL — OVERLOAD RELAY CONTACTS (MAGNETIC)

TIMED CONTACTS - CONTACT ACTION DELAYED AFTER COIL IS :

ENERGIZED

- NORMALLY OPEN WITH TIME DELAY CLOSING
- NORMALLY CLOSED WITH TIME DELAY OPENING

DE-ENERGIZED

- NORMALLY OPEN WITH INSTANT CLOSING AND TIME DELAY OPENING
- NORMALLY CLOSED WITH INSTANT OPENING AND TIME DELAY CLOSING

- MANUAL MOTOR STARTER WITH OVERLOAD PROTECTION
- FUSE
- RES — RESISTOR (FIXED)
- POTENTIOMETER TYPE RESISTOR (CONTINUOUSLY ADJUSTABLE)
- R — PUSH-TO-TEST INDICATING LIGHT
- ETM — ELAPSED TIME METER
- HEATER
- CROSSING OF CONDUCTORS-NOT CONNECTED
- CONNECTION OF CONDUCTORS, FITTING AS REQUIRED
- DISCONNECT SWITCH
- TERMINATION IN MCC
- FIELD TERMINATION (DEVICES)
- TERMINATION IN CP, OR LCP
- ELECTRODE PROBES
- PANEL MOUNTED DEVICE (SCHEMATIC)
- FIELD OR REMOTE MOUNTED DEVICE (SCHEMATIC)

08.24.99

REGISTERED PROFESSIONAL ENGINEER — MARCOS R. SANTOS — No. 7345 — ELECTRICAL — STATE OF CALIFORNIA — 9/24/99

04756

PROJECT RECORD DOCUMENT
C.W Roen Const Co.
P.O 4. Danville, CA 94526
DATE: 3/3/99 By: [illegible]

REV	DATE	BY	DESCRIPTION

SCALE: NONE

WARNING: 0 1/2 1 — IF THIS BAR DOES NOT MEASURE 1" THEN DRAWING IS NOT TO SCALE.

DESIGNED [illegible] DRAWN [illegible] CHECKED [illegible]

SUBMITTED [illegible] PROJECT ENGINEER — 41019 R. C. E. NO. — 11/26/90 DATE

[illegible] JAMES M. MONTGOMERY CONSULTING ENGINEERS, INC. — 33699 R. C. E. NO. — 11/26/90 DATE

James M. Montgomery Consulting Engineers, Inc. Pasadena, California

APPROVED [illegible] DATE

APPROVED [illegible] DATE

LAS VIRGENES MWD / TRIUNFO CSD
TAPIA WRF - REGIONAL FACILITIES EXPANSION IV
FILTRATION / DISINFECTION ADDITION

ELECTRICAL SYMBOLS

SHEET E-1 OF 100 SHEETS

JOB No. 870.0215 FILE No. LVX ELE:LVXE01.DGN

A B B R E V I A T I O N S

A	AMPERE, AUTO, AMMETER
AC	ALTERNATING CURRENT
A/C	AIR CONDITIONING
AF	AMPERE FRAME SIZE OF CKT. BRKRS.
AFF	ABOVE FINISHED FLOOR
AL	ALUMINUM
AM	AMMETER
ANN	ANNUNCIATOR
AMP	AMPERES, AMPERAGE
APPR	APPROVED
AS	AMMETER SWITCH, ADJUSTABLE SPEED
AT	AMPERE TRIP
ATS	AUTOMATIC TRANSFER SWITCH
AUTO	AUTOMATIC
AWG	AMERICAN WIRE GAUGE
BATT	BATTERY
BKR	BREAKER
BBL	BUBBLER
BLDG	BUILDING
C	CONDUIT, CLOSED
CAB	CABINET
CB	CIRCUIT BREAKER
CKT	CIRCUIT
CO	CONDUIT ONLY
COND	CONDUIT
COMPT	COMPARTMENT
COMPR	COMPRESSOR
CP	CONTROL PANEL
CPT	CONTROL POWER TRANSFORMER (IN INDIVIDUAL STARTER CUBICLE)
CR	CONTROL RELAY (MAGNETICALLY HELD)
CT	CURRENT TRANSFORMER
CU	COPPER
DC	DIRECT CURRENT
DH	DATA HIGHWAY
DISC	DISCONNECT
DISTR	DISTRIBUTION
DPDT	DOUBLE POLE DOUBLE THROW
DWG	DRAWING
E	EMPTY, EMERGENCY
ELEV	ELEVATION
EMERG	EMERGENCY
EMT	ELECTRICAL METALLIC TUBING
ENCL	ENCLOSURE
EP	EXPLOSION PROOF
EQPT	EQUIPMENT
ER	CONDUCTANCE LEVEL RELAY
ETM	ELAPSED TIME METER
EXH	EXHAUST
EXIST	EXISTING
F, ~	FREQUENCY
FDR	FEEDER
FLEX	FLEXIBLE
FLUOR	FLUORESCENT
FM	FREQUENCY METER
FUT	FUTURE
FVR	FULL VOLTAGE REVERSING
FVNR	FULL VOLTAGE NON-REVERSING
FWD	FORWARD CONTACTOR COIL
GALV	GALVANIZED
GEN	GENERATOR
GRD	GROUND
HH	HAND HOLE
HID	HIGH INTENSITY DISCHARGE
HIGH	HIGH SPEED CONTACTOR
HOA	HAND - OFF - AUTOMATIC
HP	HORSE POWER
HPS	HIGH PRESSURE SODIUM
HTR	HEATER
HVAC	HEATING VENTILATION AIR CONDITIONING
HZ	HERTZ
IMC	INTERMEDIATE METAL CONDUIT
INCAND	INCANDESCENT
IND	INDICATION (SYSTEM)
I/O	INPUT/OUTPUT
INST	INSTANTANEOUS (TD CONTACT)
INSTR	INSTRUMENT
Isc	SHORT CIRCUIT CURRENT, AMPS
INVT	INVERT
JB	JUNCTION BOX
J BOX	JUNCTION BOX
KVA	KILO (1000) VOLT AMPS
KW	KILOWATTS
KWH	KILOWATT HOUR
LC	LIGHTING CONTACTOR
LCB	LOCAL CONTROL BOARD
LCP	LOCAL CONTROL PANEL
LOC	LOCAL
LOS	PUSHBUTTON W/"LOCK-OUT-STOP"
LS	LEVEL SWITCH
LT, LTS	LIGHT, LIGHTS
LTG	LIGHTING
LOW	LOW SPEED CONTACTOR
M	MOTOR CONTACTOR COIL
MA	MILLIAMPS
MAN	MANUAL
MAG	MAGNETIC
MAX	MAXIMUM
MCC	MOTOR CONTROL CENTER
MCB	MAIN CONTROL BOARD
MCM	THOUSAND CIRCULAR MILS
MD	MOTORIZED DAMPER
MH	MANHOLE
MIN	MINUTES, MINIMUM
MLO	MAIN LUGS ONLY
MOV	MOTOR OPERATED VALVE
MS	MANUAL MOTOR STARTER
MT, MTD	MOUNT, MOUNTED
MTR	MOTOR
MUX	MULTIPLEXING PANEL
N	NEUTRAL
NA	NON-AUTOMATIC
NC	NORMALLY CLOSED
NO, NOS	NUMBER, NUMBERS, NORMALLY OPEN
NP	NAMEPLATE
NIC	NOT IN CONTRACT
NITS	NOT IN THIS SECTION
NTS	NOT TO SCALE
O	OPEN
OC	ON CENTER
CC	CENTER TO CENTER
OL	OVERLOAD RELAY
P	POLE
PB	PUSHBUTTON
PCM	PROCESS CONTROL MODULE
PCP	PROCESS CONTROL PANEL
PF	POWER FACTOR
PH, Ø	PHASE
PNL	PANEL
PNLBD	PANELBOARD
POS	POSITION
POT	POTENTIOMETER
PRI	PRIMARY
PS	PRESSURE SWITCH
PT	POTENTIAL TRANSFORMER
PVC	POLYVINYL CHLORIDE
PW	PART WINDING
PWR	POWER
REC	RECEPTACLE
RECPTS	RECEPTACLES
REQ'D	REQUIRED
REV	REVERSE CONTACTOR COIL
RGS	RIGID GALVANIZED STEEL
RUN	RUN CONTACTOR COIL
RTU	REMOTE TERMINAL UNIT
RVAT	REDUCED VOLTAGE AUTO-TRANSFORMER
RVNR	REDUCED VOLTAGE NON-REVERSING
SCH	SCHEDULE
SEC	SECONDS, SECONDARY
SECT	SECTION
SEL SW	SELECTOR SWITCH
SEQ	SEQUENCE
SHLD	SHIELDED
SHT	SHEET
SIG	SIGNAL
S1, S2	START CONTACTOR COILS
SP	SPARE
SPDT	SINGLE POLE DOUBLE THROW
SPECS	SPECIFICTIONS
SP HTR	SPACE HEATER
SPST	SINGLE POLE SINGLE THROW
ST, SH	SHUNT TRIP
STA	STATION
STD	STANDARD
STL	STEEL
STR	STARTER
SV	SOLENOID VALVE
SW	SWITCH
SYS	SYSTEM
TB	TERMINAL BOX
TC	TIME CLOCK
TACH	TACHOMETER
TEMP	TEMPERATURE
TERM	TERMINAL
TH	THERMOSTAT
TM	REPEAT CYCLE TIMER
TD	TIME DELAY RELAY
TS	TEMPERATURE SWITCH
TYP	TYPICAL
UG	UNDERGROUND
UH	UNIT HEATER
US	UNIT SUBSTATION
UST	UNIT SUBSTATION TRANSFORMER
V	VOLTAGE, VOLTS
VAR	VAR METER
VFD	VARIABLE FREQUENCY DRIVE
VSD	VARIABLE SPEED DRIVE (OTHER THAN VFD)
VP	VAPORPROOF
VS	VARIABLE SPEED, VOLTMETER SWITCH
W	WATTS, WIRE
WHD	WATTHOUR DEMAND METER
WHM	WATTHOUR METER
WP	WEATHERPROOF
XD	TRANSDUCER
XFMR	TRANSFORMER
XMTR	TRANSMITTER

GENERAL NOTES

RACEWAY

1. ALL CONDUIT, CABLE, CABLE TRAY RUNS ARE SHOWN DIAGRAMMATICALLY AND THEY SHALL BE ROUTED TO SUIT FIELD CONDITIONS.
2. THE CONTRACTOR SHALL VERIFY EXACT LOCATION OF TERMINAL BOXES AND CONDUIT EMTRANCES OF ALL EQUIPMENT AGAINST SHOP DRAWINGS BEFORE STUBBING UP CONDUITS.
3. CONNECTION BETWEEN RIGID CONDUIT AND MOTOR TERMINAL BOX SHALL BE LIQUID TIGHT FLEXIBLE CONDUIT.
4. CONDUIT TERMINATING AT SWITCHBOARD, MOTOR CONTROL CENTER, POWER AND LIGHTING PANEL, CONTROL CABINET, ETC SHALL BE EQUIPPED WITH GROUNDING BUSHING AND SHALL BE GROUNDED WITH NO. 6 GROUND WIRE.
5. INSTALL EXPANSION FITTINGS EVERY 200 FEET OF STRAIGHT RUN OF CONDUITS AND CABLE TRAYS.
6. CONDUIT CROSSING BUILDING OR STRUCTURAL EXPANSION JOINTS SHALL BE PROVIDED WITH SUITABLE EXPANSION FITTINGS. THESE FITTINGS MUST BE CONSTRUCTED IN SUCH A MANNER THAT WILL INSURE THE CONTINUITY OF THE GROUND PATH IN EACH CONDUIT OR RACEWAY.
7. CONDUIT FITTINGS AND SUPPORTS ARE NOT SHOWN ON THE DRAWINGS. THE CONTRACTOR SHALL PROVIDE ALL FITTINGS AND SUPPORT REQUIRED AND TO SUIT THE CONDITIONS.
8. THE CONTRACTOR SHALL LIMIT THE NUMBER OF BENDS BETWEEN PULL POINTS.
9. THE CONTRACTOR SHALL BE RESPONSIBLE FOR PROVIDING ALL SLEEVES AND OPENINGS REQUIRED FOR THE PASSAGE OF ELECTRICAL RACEWAYS OR CABLES EVEN WHEN THESE OPENINGS OR SLEEVES ARE NOT SPECIFICALLY SHOWN ON THE DRAWINGS.
10. PROVIDE FLEXIBLE CONDUIT WHERE RIGID CONDUIT TERMINATES AT EQUIPMENT OR DEVICES SUBJECT TO MOVEMENT FROM VIBRATION, EXPANSION AND CONTRACTION.
11. ALL UNDERGROUND CONDUIT RUNS SHALL BE WITH LONG RADIUS SWEEP BENDS. THE MINIMUM BENDING RADIUS SHALL BE 12 TIMES NOMINAL DIAMETER OF THE CONDUIT, AND NO FACTORY BENDS SHALL BE PERMITTED.
12. ALL UNDERGROUND CONDUITS NOT ENCASED IN CONCRETE SHALL BE RIGID STEEL, GALVANIZED, PVC COATED.
13. THE MINIMUM SIZE OR CONDUITS INSTALLED BELOW GRADE SHALL BE 1" UNLESS OTHERWISE NOTED.
14. THE MINIMUM SIZE OF CONDUIT INSTALLED ABOVE GRADE SHALL BE ¾" UNLESS OTHERWISE NOTED.
15. ALL FLEXIBLE CONDUIT SHALL HAVE UPPER GROUNDING CONDUCTOR.
16. FOR LIGHTING AND RECEPTACLE SYSTEMS, ONLY CONDUIT HOMERUNS AND CIRCUIT NUMBERS ARE SHOWN. CONTRACTOR SHALL PROVIDE AND INSTALL ALL NECESSARY CONDUITS, FITTINGS, JUNCTION BOXES AND ALL NECESSARY COMPONENTS SHOWN OR NOT SHOWN ON THE DRAWINGS TO MAKE ELECTRICAL INSTALLATION COMPLETE AND OPERATIONAL. ALL CONDUITS RUNS SHALL BE CONCEALED UNLESS INDICATED OTHERWISE. CIRCUIT LOADING SHALL BE AS SHOWN AND AS STATED IN PANEL SCHEDULE. ALL INSTALLATIONS SHALL BE IN ACCORDANCE WITH ALL CODES AND STANDARDS AS ENUMERATED IN SPEC. SECTION 16050. ALL MATERIALS SHALL BE IN ACCORDANCE WITH SPEC. SECTION 16400 AND 16500 ALL LIGHTING AND RECEPTACLE CIRCUITS SHALL INCLUDE 1#12 GROUND WIRE.

GROUNDING

1. ALL METALLIC STRUCTURES , METALLIC ENCLOSURES, AND ELECTRICAL EQUIPMENT, SUCH AS STRUCTURAL STEEL, METALLIC RACEWAY, FENCE, STAIR HANDRAILS, LIGHTING POLE, TANK, VESSELS, SWITCHING EQUIPMENT, PANEL, EQUIPMENT ENCLOSURE AND CABINETS GENERATOR, MOTOR, TRANSFO SWITCHGEAR, ETC. SHALL BE PERMANENTLY AND EFFECTIVELY GROUNDED AND GROUND CONNECTION SHALL BE MADE TO THE PLANT GROUND GRID. THE GROUND CONDUCTOR SHALL BE SIZED PER N.E.C. UNLESS OTHERWIZE SHOWN EXCEPT THE MINIMUM SIZE.
2. GROUNDING CONDUCTOR STUB-UP AND INSERT LOCATION ARE APPROXIMATE ONLY. THE CONTRCTOR SHALL USE HIS BEST JUDGEMENT FOR CORRECT LOCATIONS IN FIELD.
3. ALL GROUND CONDUCTORS SHALL BE #4/0 SIZE UNLESS OTHERWIZE NOTED.
4. ALL GROUND CONDUCTOR SHALL BE BARE, COPPER, STRANDED UNLESS OTHERWISE NOTED.
5. ALL GROUNDING CONDUCTOR SHALL BE MINIMUM OF 18" BELOW GRADE EXCEPT UNDER BUILDING SLAB WHEN THEY SHALL BE MINIMUM OF 6" BELOW SLAB.

EQUIPMENT AND DEVICES

1. LOCATIONS OF EQUIPMENT, CONTROL DEVICES, INSTRUMENTS, BOXES, PANELS, ETC ARE APPROXIMATE ONLY, AND PROPER JUDGEMENT MUST BE EXERSIZED IN EXECUTING THE WORK TO INSURE THE BEST POSSIBLE INSTALLATION.
2. PACKAGE EQUIPMENT. SOME CONDUITS AND WIRES ARE SHOWN ON THE DRAWINGS, BUT IT IS EXPECTED THAT SOME ADDITIONAL CONDUITS AND WIRES MAY BE REQUIRED BY EQUIPMENT MANUFACTURERS TO COMPLETE INSTALLATION. IT IS INCUMBENT UPON THE GENERAL CONTRACTOR TO COORDINATE THIS REQUIREMENT WITH HIS SUBCONTRACTORS TO MAKE SURE THAT EQUIPMENT SUPPLIER PROVIDES ALL NECESSARY ELECTRICAL INFORMATION TO HIS ELECTRICAL SUBCONTRACTOR FOR INCLUSION OF COSTS IN BID PACKAGE. ALL NECESSARY MATERIALS AND LABOR TO COMPLETE ELECTRICAL INSTALLATION SHALL BE PROVIDED WHETHER SHOWN OR NOT SHOWN ON THE DRAWINGS. ALL ELECTRICAL WORK SHALL BE IN ACCORDANCE WITH ALL CODES AND STANDARDS PER SPEC. SECTIONS DIVISION 16.
3. ALL EQUIPMENT DIMENSIONS SHOWN ON PLANS AND ELEVATIONS ARE APPROXIMATE ONLY. THE CONTRACTOR SHALL USE THE SHOP DRAWINGS FOR PROPER LAYOUT, FOUNDATION AND PAD, ETC. FOR FINAL INSTALLATION. WITHOUT ANY ADDITIONAL COST TO THE OWNER.
4. SWITCHGEAR, SWITCHBOARD, MOTOR CONTROL CENTER AND ALL FREE STANDING PANEL SHALL BE SET ON CONCRETE PAD AND LEVELING CHANNELS EMBEDDED IN THE PAD UNLESS OTHERWISE NOTED.

SCHEMATIC DIAGRAMS

1. ALL CONTROLS ARE SHOWN DE-ENERGIZED
2. ALL CONTROL DIAGRAMS SHOW CONTROL FUNCTION ONLY. CONTRACTOR SHALL INCORPORATE OTHER NECESSARY FUNCTIONS FOR PROPER OPERATIONS AND PROTECTION ON THE SYSTEM.
3. SLAVE RELAY SHALL BE ADDED WHERE REQUIRED TO PROVIDE ALL NECESSARY CONTACTS FOR THE SCHEMATIC DIAGRAMS SHOWN.
4. ALL DEVICES SHOWN ON MOTOR STARTER SCHEMATIC DIAGRAMS SHALL BE MOUNTED IN THE MOTOR STARTER CUBICLES UNLESS OTHERWISE NOTED.
5. ALL DEVICES SHOWN IN THE CONTROL PANEL OR CABINET SHALL BE MOUNTED IN THE CONTROL PANEL OR CABINET UNLESS OTHERWISE NOTED.
6. ALL MOTOR OPERATED VALVES ARE SHOWN FULLY OPEN.

MISCELLANEOUS

1. IN CASE OF INTERFERENCE BETWEEN ELECTRICAL EQUIPMENT SHOWN ON THE DRAWINGS AND THE OTHER EQUIPMENT, THE CONTRACTOR SHALL NOTIFY THE ENGINEER IN WRITING AND ENGINEER SHALL REVIEW THE PROPOSED CHANGES BEFORE THEY ARE MADE.
2. ALL RECEPTACLES SHALL BE MOUNTED 12" ABOVE FLOOR SURFACE UNLESS OTHERWISE NOTED.
3. ALL RECEPTACLES IN OUTDOOR AND ANTICIPATED WET AREA SHALL BE GROUND FAULT INTERRUPTER RECEPTACLES.
4. ALL OUTDOOR DEVICES SHALL BE WEATHERPROOF TYPE.
5. LOCATION OF MANHOLES AND PULLBOXES ARE APPROXIMATE. CONTRACTOR SHALL COORDINATE EXACT LOCATION OF MANHOLES AND PULLBOXES WITH MECHANICAL AND CIVIL WORK.
6. CONTRACTOR SHALL PROVIDE ADDITIONAL MANHOLES OR PULLBOXES TO THOSE SHOWN WHERE THEY ARE REQUIRED TO MAKE A WORKABLE INSTALLATION.
7. CIRCUITS OF DIFFERENT SERVICE VOLTAGE SHALL BE INSTALLED IN SEPARATE RACEWAYS, MANHOLES, HANDHOLES, PULLBOXES AND JUNCTION BOXES. THE VOLTAGE AND SERVICE LEVELS ARE:

(1) 12KV, 13.2KV, 16.5KV, 21KV
(2) 2.4KV, 5KV
(3) 120V-480VOLT
(4) INSTRUMENTATION LESS THAN 50VDC
(5) TELEPHONE AND COMMUNICATIONS.

09-24-94

04757

PROJECT RECORD DOCUMENT
C.W. Roen Const Co.
P.O. 4, Danville, CA 94526
DATE: 3/3/94 By:

PROJECT RECORD DOCUMENT
C W Roen Const Co.
P O 4, Danville, CA 94526
DATE: 9/26/94 By:

REGISTERED PROFESSIONAL ENGINEER
MARCOS R. S. NIEVES
No. 7345
ELECTRICAL
9/30/94
STATE OF CALIFORNIA

REV	DATE	BY	DESCRIPTION

SCALE: NONE

WARNING: 0 ½ 1 — IF THIS BAR DOES NOT MEASURE 1" THEN DRAWING IS NOT TO SCALE.

DESIGNED Marcos Nieves
DRAWN Denise Chiarion
CHECKED

SUBMITTED
PROJECT ENGINEER — R. C. E. NO. 41019 — DATE 11/26/90
JAMES M. MONTGOMERY CONSULTING ENGINEERS, INC. — R. C. E. NO. 33699 — DATE 11/26/90

JMM James M. Montgomery Consulting Engineers, Inc.
Pasadena, California

APPROVED — DATE
APPROVED — DATE

LAS VIRGENES MWD / TRIUNFO CSD
TAPIA WRF - REGIONAL FACILITIES EXPANSION IV
FILTRATION / DISINFECTION ADDITION

ELECTRICAL ABBREVIATIONS AND GENERAL NOTES

SHEET E-2 OF 110 SHEETS

JOB No. 870.025 — FILE No. LVX ELEC VXE13.DGN

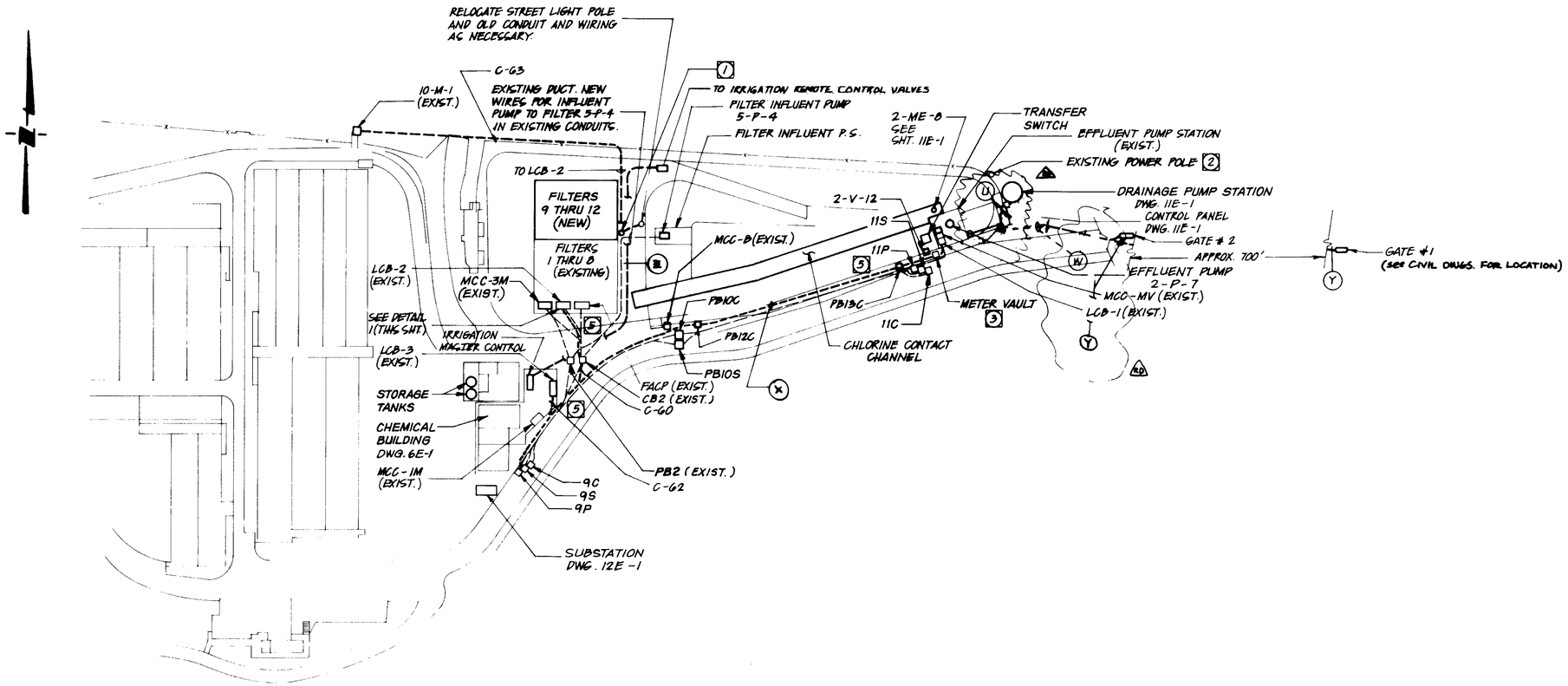

PLOT PLAN

SCALE: 1" = 60'

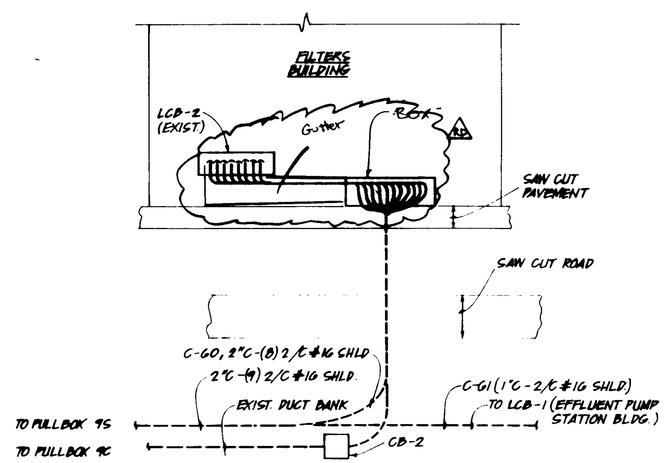

DETAIL 1

N.T.S.

NOTES:

1. CONTRACTOR SHALL RELOCATE EXISTING AREA LIGHTING POLE AND FIXTURE, SEE DRAWING C-2 FOR EXISTING LOCATION AND NEW LOCATION.
2. THE POWER POLE WILL BE REMOVED BY OTHERS TO FACILITATE NEW CONTRACTOR'S WORK. CONTRACTOR SHALL NOTIFY OWNER 45 DAYS BEFORE START OF CONSTRUCTION OF THE BALANCING POND & EFFLUENT STRUCTURE OR ANY PART OF THIS PROJECT THAT WILL BE AFFECTED BY THE EXISTING POWER POLE. TO ALLOW TIME FOR IT'S REMOVAL.
3. CONTRACTOR SHALL DISCONNECT AND REMOVE EXISTING SONIC FLOWMETER, INSTALL NEW MAGMETER, INSTALL NEW WIRES AND CONNECT. SEE SHT. I-3 FOR REQUIREMENT.
4. THESE CONDUITS ARE EXISTING. CONTRACTOR SHALL PROVIDE WIRES AS NOTED.
5. NEW SIGNAL WIRES HAVE TO BE RUN FROM EACH LCB-1, LCB-2, LCB-3 TO MCB VIA SIGNAL PULLBOX 9S AS INDICATED ON THIS DRAWING AND ALSO ON DRAWINGS 4E-4 & 6E-1. CONTRACTOR SHALL PROVIDE NEW DUCT BANKS FROM RESPECTIVE LCB TO PULLBOX 9S. CONTR. SHALL TERMINATE THESE SIGNAL AND CONTROL WIRES AT PULLBOX 9S. CONTR. SHALL MAKE PROPER SPLICES WITH EXISTING WIRES AT PULLBOX 9S AND 9C AND ALL SPLICES SHALL BE WATERPROOF. CONTRACTOR SHALL MAKE SURE TO INCLUDE ALL MATERIALS AND LABOR NECESSARY TO DO ALL THIS WORK IN HIS BID PRICE.

PROJECT RECORD DOCUMENT
C.W. Roen Const Co.
P.O. 4 Danville CA 94526
DATE: 3/3/94 By: BEL

04-24-94

REGISTERED PROFESSIONAL ENGINEER — MARCOS R. SANTANA — No. 7346 — ELEC. — STATE OF CALIFORNIA

04758

REV	DATE	BY	DESCRIPTION
1	1-99	BWC	AS-BUILTS

SCALE: AS NOTED

WARNING: 0 1/2 1 — IF THIS BAR DOES NOT MEASURE 1" THEN DRAWING IS NOT TO SCALE.

DESIGNED: Willis Webber
DRAWN: Bryan Ellis
CHECKED: M. Santana

SUBMITTED: Jorge M. Pacas — PROJECT ENGINEER — 41019 R.C.E. NO. — 11/26/90 DATE
RECOMMENDED: JAMES M. MONTGOMERY, CONSULTING ENGINEERS, INC. — 33699 R.C.E. NO. — 11/26/90 DATE

JMM James M. Montgomery Consulting Engineers, Inc. — Pasadena, California

APPROVED ____ DATE
APPROVED ____ DATE

LAS VIRGENES MWD / TRUNFO CSD
TAPIA WRF - REGIONAL FACILITIES EXPANSION IV
FILTRATION / DISINFECTION ADDITION

PLOT PLAN

SHEET E-3 OF 110 SHEETS

JOB NO. 870.0215 — FILE — CC

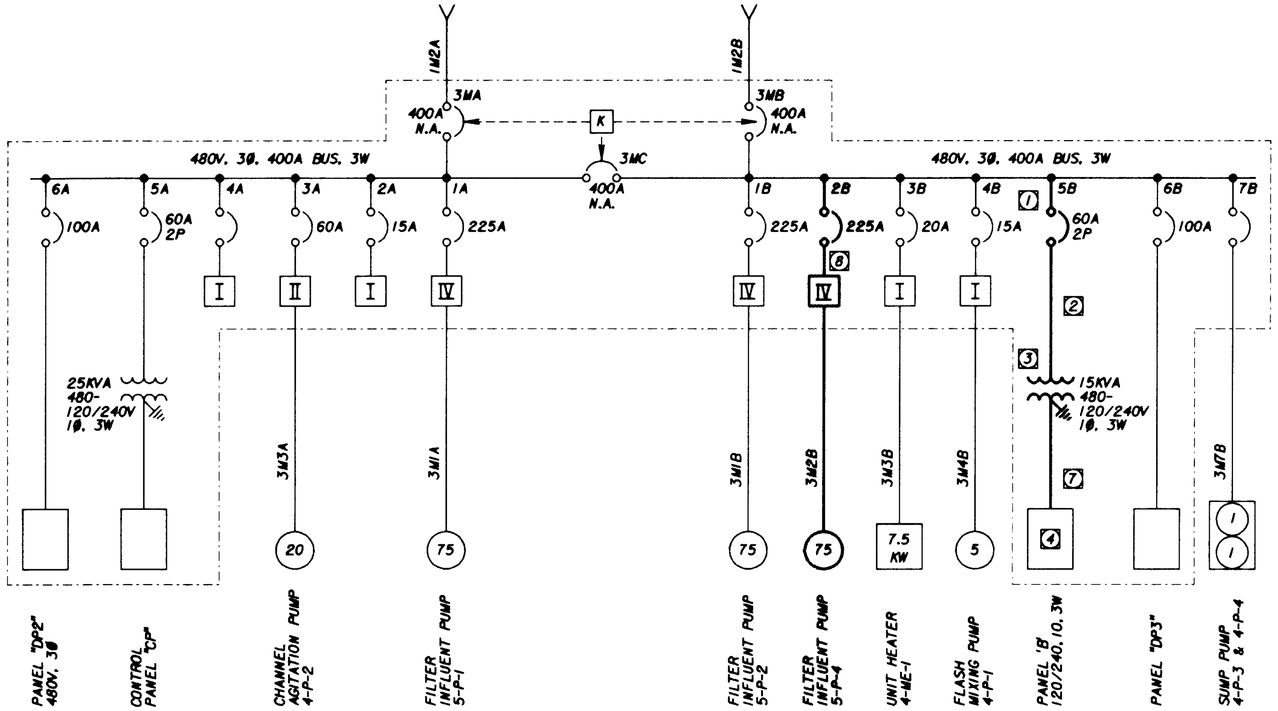

MCC-3M

(EXISTING)

NOTES:

1. REPLACE THE EXISTING 40A. 2P CIRCUIT BREAKER WITH ANOTHER CIRCUIT BREAKER 60A. 2P.
2. REPLACE THE EXISTING CABLE WITH A 2#6. 1#8GND CABLE.
3. REPLACE THE EXISTING 15KVA TRANSFORMER WITH A 25KVA. 480/120/240V TRANSFORMER.
4. USE THE SPARES AND SPACES IN PANEL 'B' AND REPLACE THE EXISTING MAIN CIRCUIT BREAKER AS SHOWN IN DWG. 4E-7.
5. FEATURES SHOWN WITH LIGHT LINES ARE EXISTING.
6. FEATURES SHOWN WITH DARK LINES TO BE ADDED.
7. REPLACE THE EXISTING CABLE WITH A 3#1/0 . 1#6GND CABLE.
8. NEW COMBINATION CIRCUIT BREAKER-MAGNETIC STARTER. SEE SHT. 5E-1 FOR DETAILS.

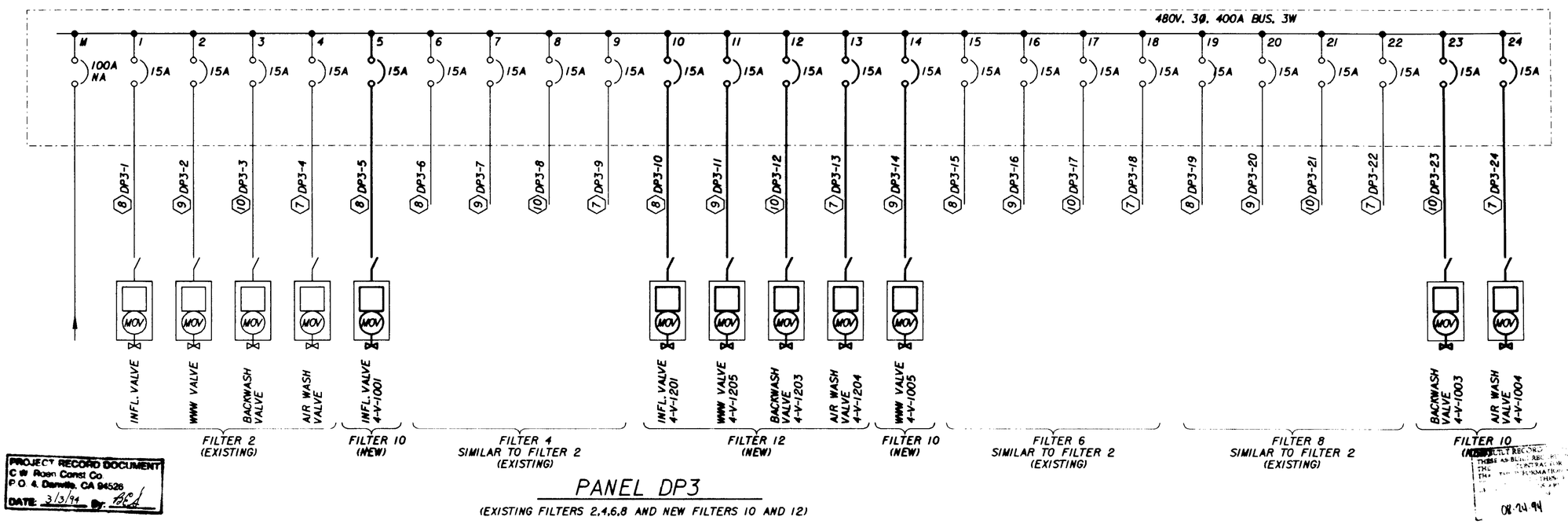

PANEL DP3

(EXISTING FILTERS 2,4,6,8 AND NEW FILTERS 10 AND 12)

04759

PROJECT RECORD DOCUMENT
C.W. Roen Const Co.
P.O. 4, Danville, CA 94526
DATE: 3/3/94 By: B.C.A.

REGISTERED PROFESSIONAL ENGINEER — MARCOS R. SANTOS — No. 7998 — ELECTRICAL — STATE OF CALIFORNIA — 9/30/94

FULLY RECORDED — THESE AS-BUILT RECORD DRAWINGS INCLUDE INFORMATION FURNISHED BY CONTRACTOR — 08-24-94 C. Oral

JOB No. 870.0215 FILE No. LVX ELEELVXE04.DGN

REV	DATE	BY	DESCRIPTION

SCALE: NONE

WARNING: 0 ½ 1 — IF THIS BAR DOES NOT MEASURE 1" THEN DRAWING IS NOT TO SCALE.

DESIGNED Maryam Walton
DRAWN MARINE CHRAKIAN
CHECKED M. Smith

SUBMITTED George M. Pacas — PROJECT ENGINEER — 41019 R. C. E. NO. — 11/26/90 DATE
JAMES M. MONTGOMERY CONSULTING ENGINEERS, INC. — 33699 R. C. E. NO. — 11/26/90 DATE

JMM James M. Montgomery Consulting Engineers, Inc. — Pasadena, California

APPROVED — DATE
APPROVED — DATE

LAS VIRGENES MWD / TRIUNFO CSD
TAPIA WRF - REGIONAL FACILITIES EXPANSION IV
FILTRATION / DISINFECTION ADDITION

SINGLE LINE DIAGRAM - 1

SHEET E-4 OF 100 SHEETS

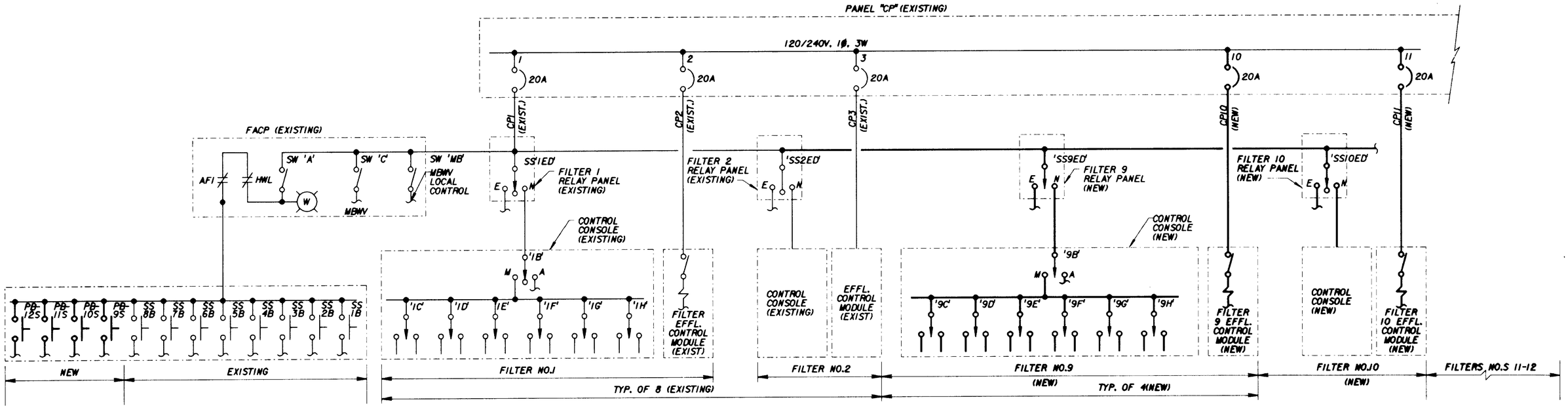

PARTIAL FILTER BACKWASH CONTROL POWER

SINGLE LINE DIAGRAMS FOR EXISTING FILTERS 2 THRU 8 AND NEW FILTERS 9 THRU 12 ARE SYMILAR TO EXISTING FILTER NO. 1

NOTES:

1. FEATURES SHOWN WITH LIGHT LINES ARE EXISTING.
2. FEATURES SHOWN WITH DARK LINES TO BE ADDED.
3. ALL FILTER VALVE OPERATORS SHALL BE AS SPECIFIED IN THE SPECIFICATION SECTION 15101, "VALVE OPERATORS".

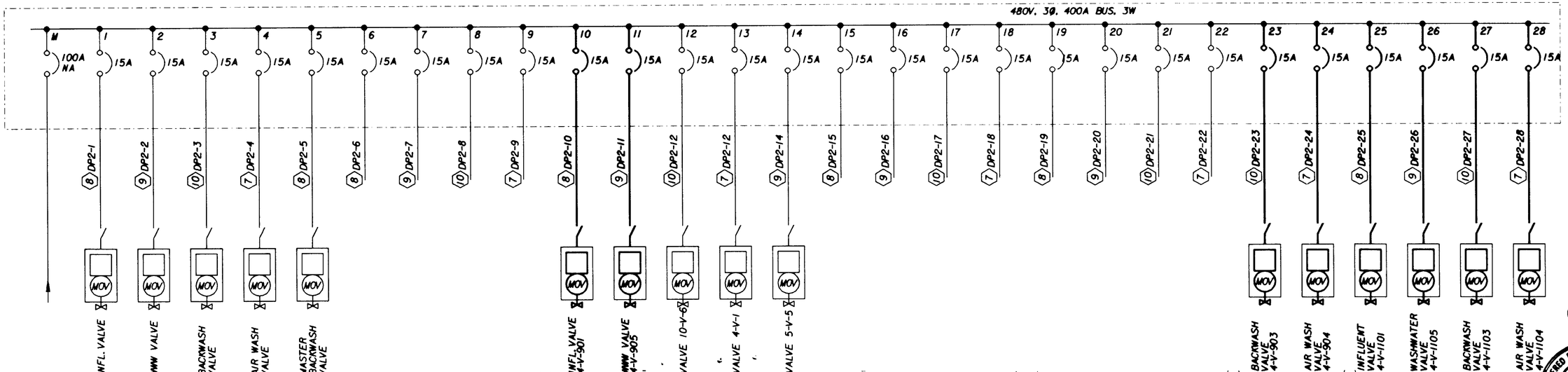

PANEL DP2

(EXISTING FILTERS NO. 1, 3, 5, 7 AND NEW FILTERS 9 & 11 EXIST. VALVES 10-V-6, 4-V-1, 5-V-5 AND MASTER BACKWASH VALVE)

04760

PROJECT RECORD DOCUMENT
C.W. Roen Const Co.
P.O. 4, Danville, CA 94526
DATE: 3/3/94 By: [illegible]

REGISTERED PROFESSIONAL ENGINEER — FRANCOS R. SANTOS — No. 7[illegible] — ELECTRICAL — STATE OF CALIFORNIA — 9/30/94

01-26-94 [illegible]

REV	DATE	BY	DESCRIPTION

SCALE: NONE

WARNING: 0 ½ 1 — IF THIS BAR DOES NOT MEASURE 1" THEN DRAWING IS NOT TO SCALE.

DESIGNED [illegible]
DRAWN MARINE CHRAKIAN
CHECKED [illegible]

SUBMITTED [illegible] PROJECT ENGINEER — 41019 R. C. E. NO. — 11/26/90 DATE
[illegible] JAMES M. MONTGOMERY CONSULTING ENGINEERS, INC. — 32699 R. C. E. NO. — 11/26/90 DATE

JMM James M. Montgomery Consulting Engineers, Inc. — Pasadena, California

APPROVED [illegible] DATE
APPROVED [illegible] DATE

LAS VIRGENES MWD / TRIUNFO CSD
TAPIA WRF - REGIONAL FACILITIES EXPANSION IV
FILTRATION / DISINFECTION ADDITION

SINGLE LINE DIAGRAM - [illegible]

SHEET E-5 OF 110 SHEETS

JOB No. 870.0215 FILE No. LVX ELEL VXE05.DGN

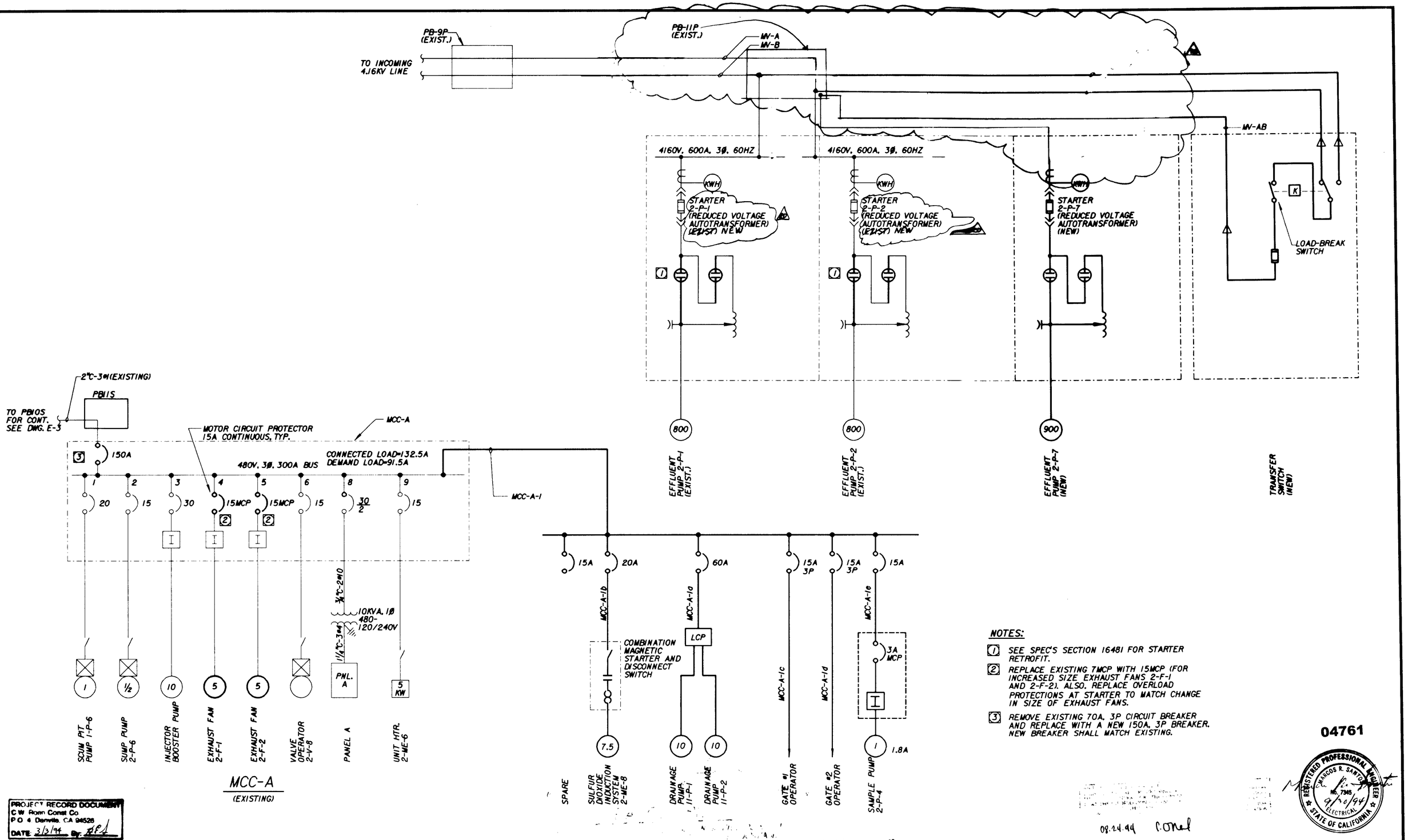

NOTES:

1. SEE SPEC'S SECTION 16481 FOR STARTER RETROFIT.
2. REPLACE EXISTING 7MCP WITH 15MCP (FOR INCREASED SIZE EXHAUST FANS 2-F-1 AND 2-F-2). ALSO, REPLACE OVERLOAD PROTECTIONS AT STARTER TO MATCH CHANGE IN SIZE OF EXHAUST FANS.
3. REMOVE EXISTING 70A. 3P CIRCUIT BREAKER AND REPLACE WITH A NEW 150A. 3P BREAKER. NEW BREAKER SHALL MATCH EXISTING.

04761

REGISTERED PROFESSIONAL ENGINEER — MARCOS R. SANTOS — No. 7345 — 9/10/94 — ELECTRICAL — STATE OF CALIFORNIA

08.24.94 C.O'Neal

PROJECT RECORD DOCUMENT
C W Roen Const Co
P O 4 Danville, CA 94526
DATE 3/3/94 By. RPS

REV	DATE	BY	DESCRIPTION
1	1-9-94	DWC	

SCALE: NONE

WARNING: 0 1/2 1 — IF THIS BAR DOES NOT MEASURE 1" THEN DRAWING IS NOT TO SCALE.

DESIGNED Wm. Walt
DRAWN NARINE CHERKIAN
CHECKED M. Santos

SUBMITTED Jorge M. Pacas — PROJECT ENGINEER — 41019 — R. C. E. NO. — 11/26/90 — DATE
JAMES M. MONTGOMERY CONSULTING ENGINEERS, INC. — 33699 — R. C. E. NO. — 11/26/90 — DATE

JMM James M. Montgomery, Inc. Consulting Engineers, Inc. — Pasadena, California

APPROVED — DATE
APPROVED — DATE

LAS VIRGENES MWD
TAPIA WRP - REGIONAL FACILITIES EXPANSION
FILTRATION / DISINFECTION ADDITION

SINGLE LINE DIAGRAM - 3

SHEET E-6 OF 110 SHEETS

JOB No. 870.0215 — FILE No. LVX ELELVXE06.DGN

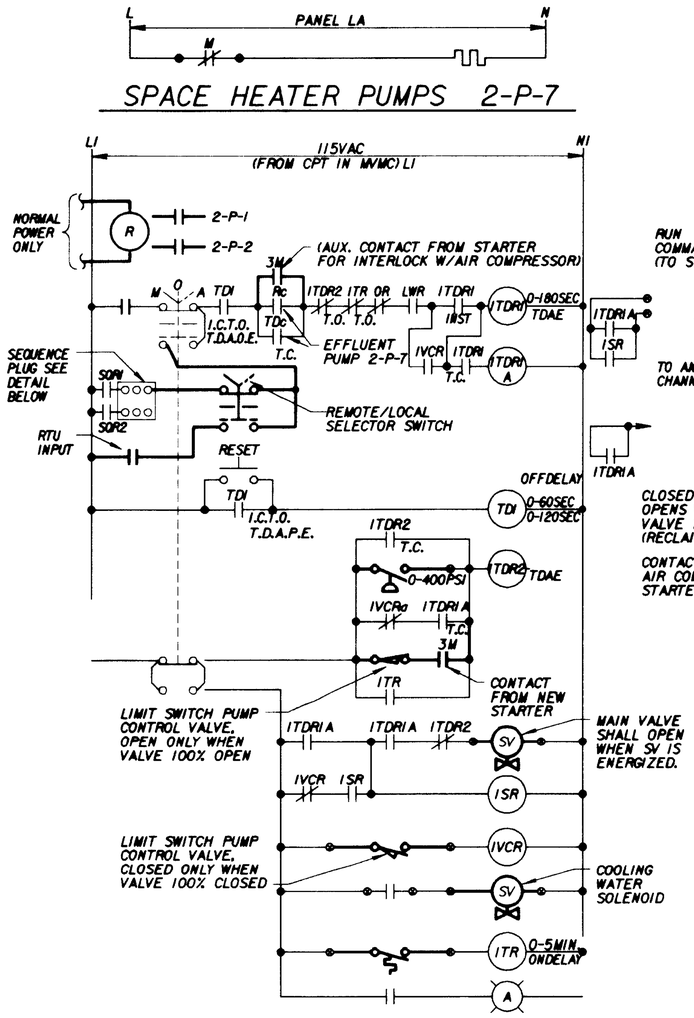

STARTER CONTROL- THREE EXISTING (EXCEPT AS NOTED)

NEW COMPONENTS SHOWN ARE REQUIRED FOR NEW PUMP 2-P-7

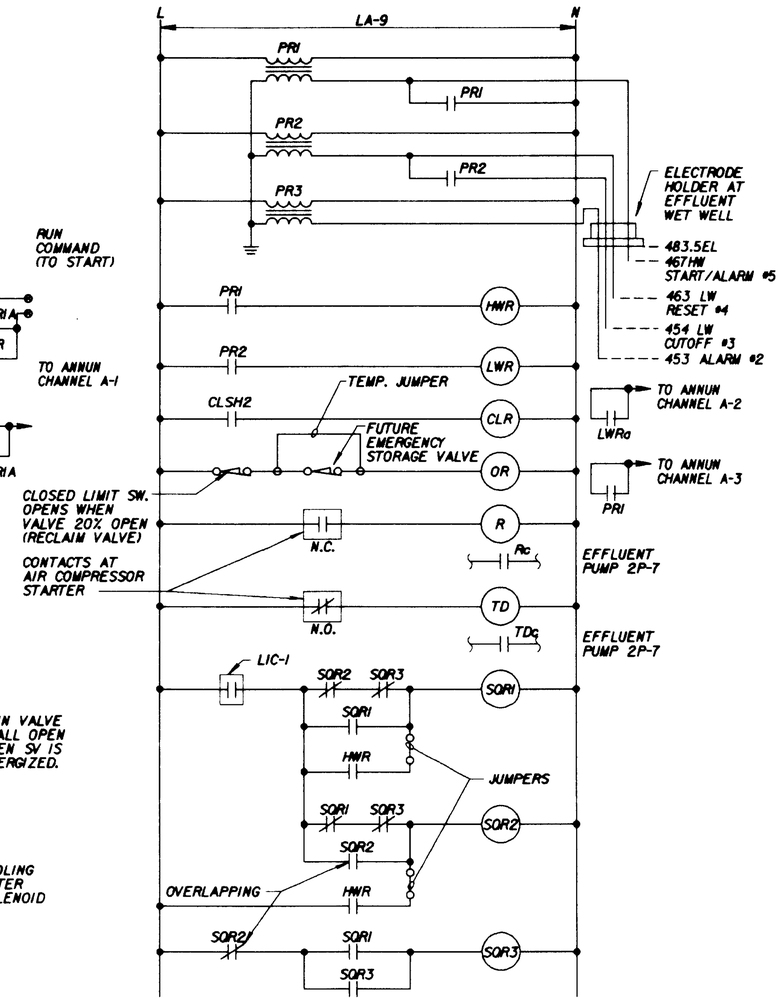

EFFLUENT PUMP CONTROL

EXISTING EXCEPT AS NOTED

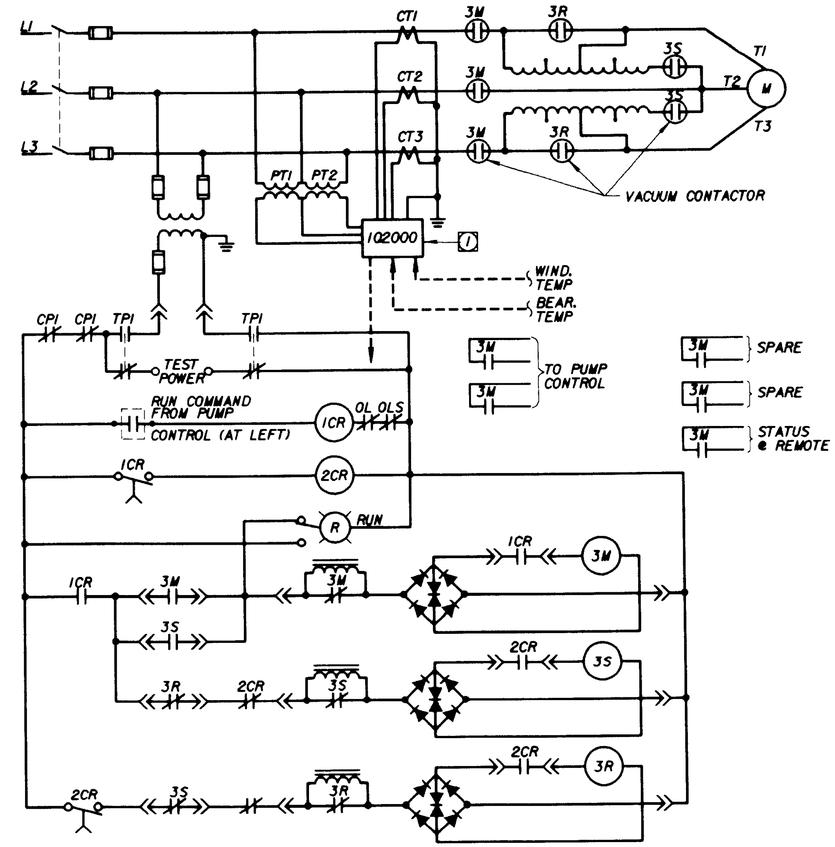

MOTOR STARTER SCHEMATIC

(PUMP 2-P-7)

NOTE:

(1) SEE SPECS SECTION 16481 CHAPTER 28.

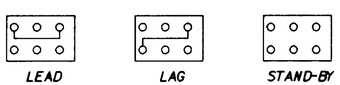

SEQUENCE PLUGS

04762

PROJECT RECORD DOCUMENT
C W Engineering Co
P O Box CA 94526
DATE 3/3/94 BY

AS-BUILT RECORD DRAWING
THESE AS-BUILT RECORD DRAWINGS ARE BASED ON INFORMATION PROVIDED BY THE CONTRACTOR THAT THE INFORMATION PROVIDED HAS BEEN ACCURATELY TRANSFERRED TO THESE RECORD DRAWINGS. THE RELYING ON THESE RECORD DRAWINGS ARE ADVISED TO MAKE INDEPENDENT VERIFICATION OF THEIR ACCURACY BEFORE
DATE 9.14.94 BY

REGISTERED PROFESSIONAL ENGINEER
MARCOS R. SANTOS
No. 7885
9/30/94
ELECTRICAL
STATE OF CALIFORNIA

REV	DATE	BY	DESCRIPTION

SCALE: NONE

WARNING: 0 ½ 1 — IF THIS BAR DOES NOT MEASURE 1" THEN DRAWING IS NOT TO SCALE.

DESIGNED Marcos Walker
DRAWN NARINE CHAKIAN
CHECKED M. Hamilton

SUBMITTED Jorge M. Pacas — PROJECT ENGINEER — R. C. E. NO. 41019 — DATE 11/26/90
JAMES M. MONTGOMERY CONSULTING ENGINEERS, INC. — R. C. E. NO. 33699 — DATE 11/26/90

JMM James M. Montgomery Consulting Engineers, Inc.
Pasadena, California

APPROVED — DATE
APPROVED — DATE

LAS VIRGENES MWD / TRIUNFO CSD
TAPIA WRF - REGIONAL FACILITIES EXPANSION IV
FILTRATION / DISINFECTION ADDITION

SCHEMATIC DIAGRAM

SHEET E-7 OF 8 SHEETS

JOB No. 870.0215 — FILE No. LVX ELEC VXE07.DGN

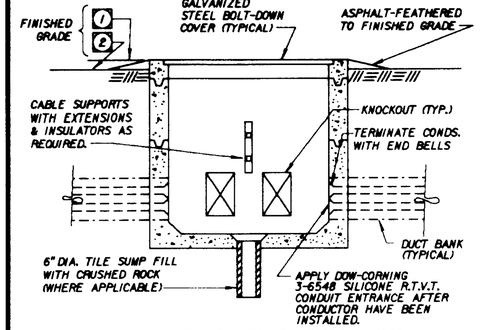

NOTE: PULLBOX INSTALLATION TO BE WATERTIGHT AFTER CONDUITS HAVE BEEN INSTALLED.

1 AT PAVED AREAS

2 AT PARKWAYS

TYPICAL PULLBOX — E-102 JMM

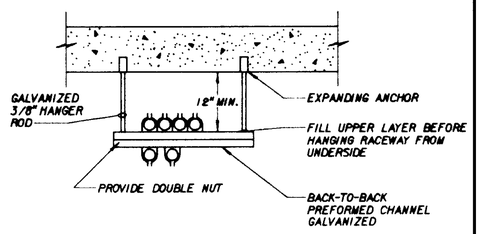

CONDUIT TRAPEZE — E-200 JMM

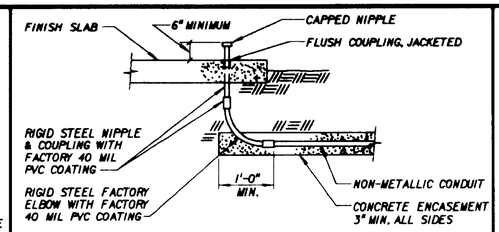

RISER FROM NON-METALLIC DUCT

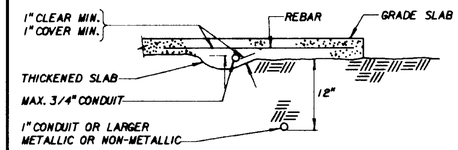

CONDUIT PLACEMENT — E-205 JMM

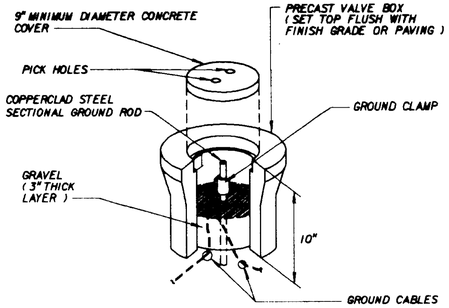

GROUND ROD INSTALLATION — E-302 JMM

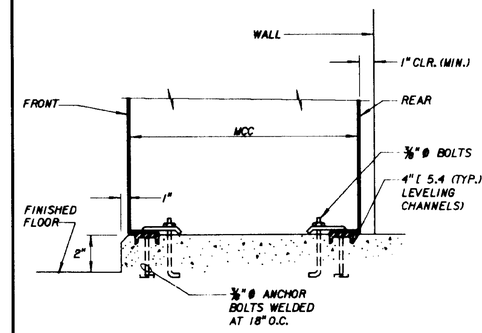

SWITCHBOARD (MCC) MOUNTING — E-400 JMM

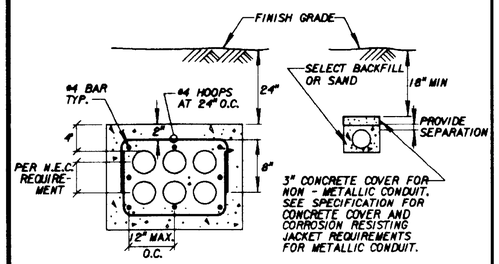

NOTE: COLOR OF CONCRETE ENCASEMENT PER SPECS.

TYPICAL DUCT BANK — E-103 JMM

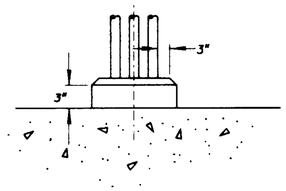

HOUSEKEEPING CURB REQUIRED, AT ALL INTERIOR WALL LOCATIONS FOR SINGLE & MULTIPLE RISERS. RISERS SHALL BE GROUPED SO THAT SINGLE RISERS ARE SIX FT. APART MINIMUM.

CONCRETE HOUSEKEEPING CURB — E-203 JMM

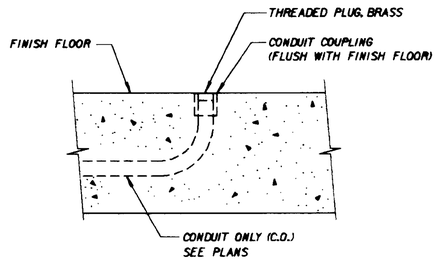

CONDUIT TERMINATION FOR FUTURE EQUIPMENT — E-206 JMM

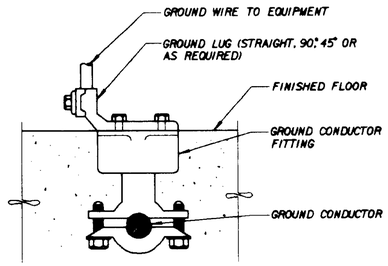

NOTE:
BOLTS SHALL BE INSERTED IN BOLT HOLES BEFORE CONNECTOR IS EMBEDDED.

GROUNDING INSERT — E-308 JMM

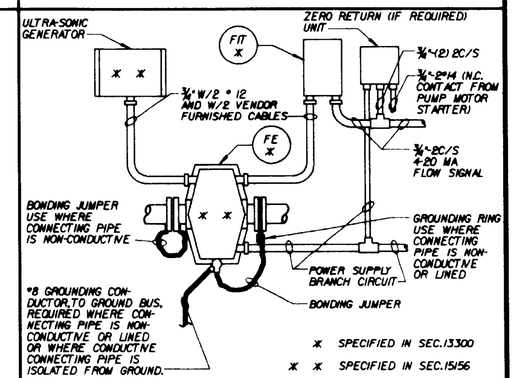

NOTE: ALL VENDOR-FURNISHED CABLE SHALL BE CUT TO LENGTH AND TERMINATED PER MANUFACTURER'S RECOMMENDATIONS.

MAGNETIC FLOWMETER, TRANSMITTER — E-501 JMM
ULTRASONIC GENERATOR AND ZERO RETURN UNIT

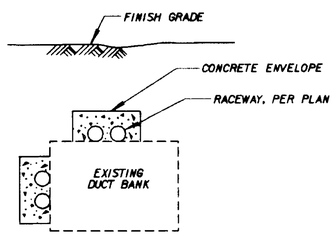

DUCT BANK EXPANSION — E-105 JMM

PROJECT RECORD DOCUMENT
CW R... Const Co.
PO 4 Danville CA 94526
DATE 3/3/94 By [illegible]

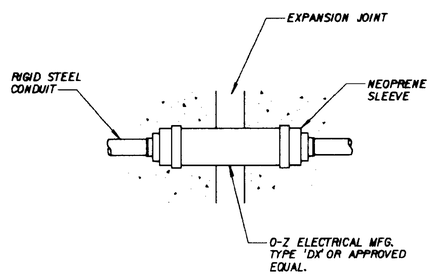

NOTE:
PROVIDE EXTERNAL BONDING JUMPER WHEN COUPLING HAS NO INTERIOR JUMPER.

EXPANSION COUPLING — E-204 JMM

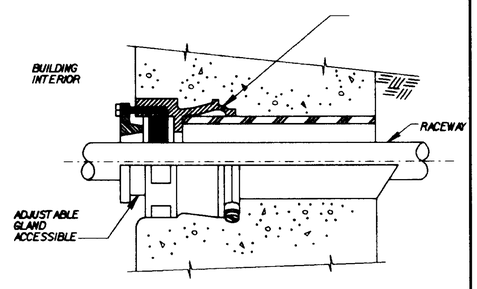

NOTE:
USE WATERTIGHT CONDUIT SEAL WHERE CONDUIT PENETRATIONS OF BUILDING EXTERIOR WALLS ARE BELOW GRADE.

WATERTIGHT WALL CONDUIT SEAL — E-213 JMM

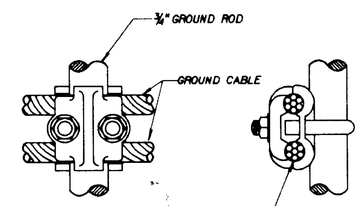

ROD TYPE GROUND CONNECTOR 90° CABLE CONNECTION TO ROD OR PIPE.

CABLE TO ROD CONNECTION — E-309 JMM

04763

04.24.94

REGISTERED PROFESSIONAL ENGINEER MARCOS R. SANTOS 9/30/94 ELECTRICAL STATE OF CALIFORNIA

REV	DATE	BY	DESCRIPTION

SCALE: NONE

WARNING: 0 1/2 1 — IF THIS BAR DOES NOT MEASURE 1" THEN DRAWING IS NOT TO SCALE.

DESIGNED Vaurane Nath
DRAWN VARINE CHAKRIAN
CHECKED M. Santos

SUBMITTED Marcos M. Santos 4109 11/26/90 — PROJECT ENGINEER / R. E. NO. / DATE
James M. Montgomery Consulting Engineers, Inc. 33699 11/26/90 — R. C. E. NO. / DATE

James M. Montgomery Consulting Engineers, Inc.
Pasadena, California

APPROVED ____ DATE
APPROVED ____ DATE

LAS VIRGENES MWD / TRUNFO CSD
TARIA ~~WRF~~ + ~~REGIONAL~~ FACILITIES EXPANSION IV
FILTRATION / DISINFECTION ADDITION

STANDARD DETAILS - 1

SHEET E-8 OF 130 SHEETS

JOB No. 870.0215 FILE No. LVX ELE:VXE08.DGN

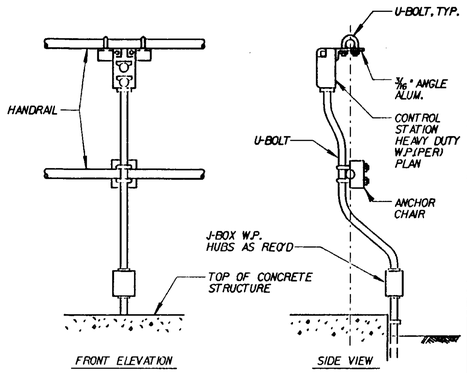

CONTROL STATION MOUNTING

E-404 JMM

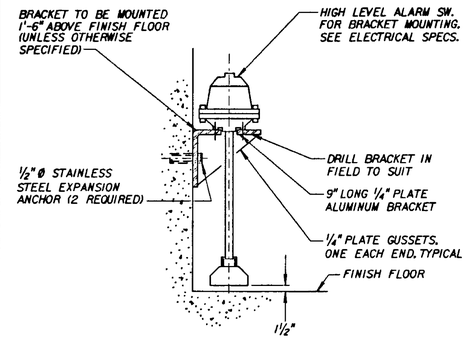

FLOOD ALARM SWITCH

E-408 JMM

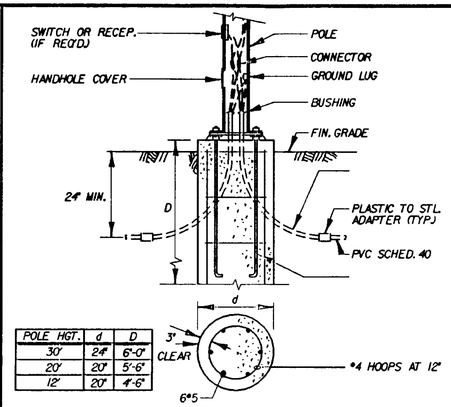

POLE HGT.	d	D
30'	24"	6'-0"
20'	20"	5'-6"
12'	20"	4'-6"

LIGHTING POLE FOUNDATION

E-600 JMM

NOTE: EXPOSED FOUNDATION CAPS SHALL BE FORMED TO MATCH THE OUTLINE OF POLE BASEPLATE.

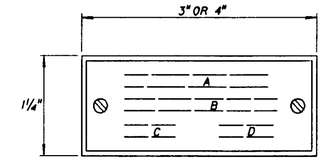

1. ALL LETTERS ARE 1/4" IF NOT NOTED OTHERWISE.
2. ALL NAMEPLATES TO BE MOUNTED ON VERTICAL CENTER LINE OF THEIR CUBICLE OR DEVICE.
3. ATTACH ALL NAMEPLATES WITH BRASS SCREWS.
4. PROVIDE BLANK NAMEPLATES FOR ALL SPARE AND FUTURE CIRCUITS.

NAMEPLATE

E-708 JMM

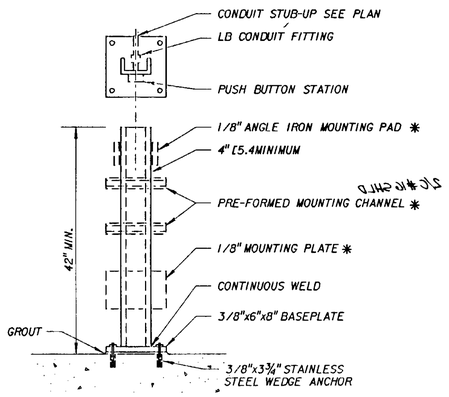

EQUIPMENT MOUNTING STAND

E-405 JMM

* PROVIDE MOUNTING ACCESSORY TO SUIT EQUIPMENT

STEEL CONSTRUCTION, HOT-DIPPED GALVENIZED AFTER CONSTRUCTION.

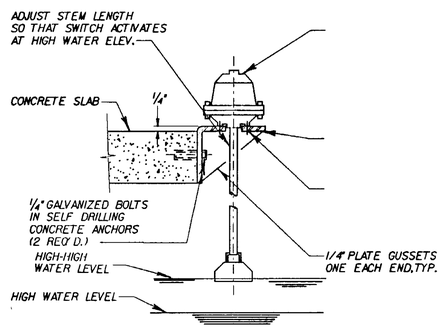

HIGH LEVEL ALARM SWITCH, BRACKET MOUNTED

E-409 JMM

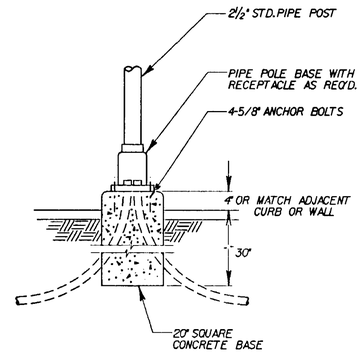

PIPE POLE BASE

E-602 JMM

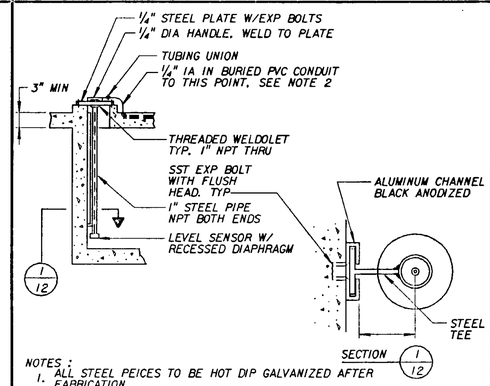

NOTES:
1. ALL STEEL PEICES TO BE HOT DIP GALVANIZED AFTER FABRICATION.
2. AIR SIGNAL TUBING TO BE ROUTED IN 1" PVC BURIED PIPE.

LEVEL SENSOR INSTALLATION

E-417 JMM

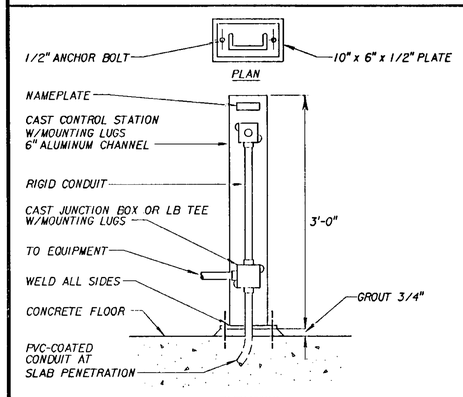

MOUNTED CONTROL STATION

E-406 JMM

PROJECT RECORD DOCUMENT
C.W. Roen Const Co.
P.O. 4, Danville, CA 94526
DATE: 9/20/94 By: BCL

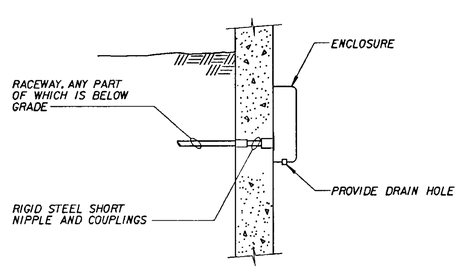

CONDUIT MOISTURE SEAL

E-416 JMM

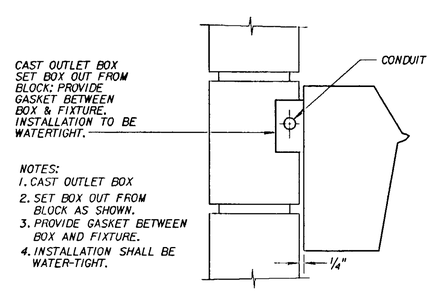

NOTES:
1. CAST OUTLET BOX
2. SET BOX OUT FROM BLOCK AS SHOWN.
3. PROVIDE GASKET BETWEEN BOX AND FIXTURE.
4. INSTALLATION SHALL BE WATER-TIGHT.

WALL HUNG FIXTURE MOUNTING

E-605 JMM

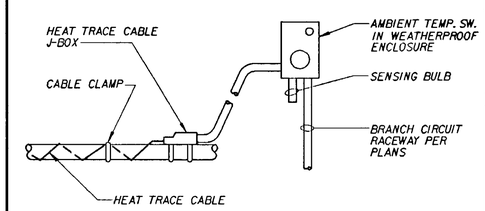

NOTE: HEAT TRACE APPURTENANCES ARE SPECIFIED IN SEC. 16850

HEAT TRACE CABLE CONNECTION

E-701 JMM

08.24.94 C. Mal

04764

REGISTERED PROFESSIONAL ENGINEER MARCOS R. SANTOS No. 7345 ELECTRICAL STATE OF CALIFORNIA

PROJECT-RECORD DOCUMENT
C.W. Roen Const Co.
P.O. 4, Danville, CA 94526
DATE: 3/3/94 By: BCL

REV	DATE	BY	DESCRIPTION

SCALE: NONE

WARNING: 0 1/2 — IF THIS BAR DOES NOT MEASURE 1" THEN DRAWING IS NOT TO SCALE.

DESIGNED Navaie Vatan
DRAWN NAVAIE VATAN
CHECKED MA Santos

SUBMITTED Jorge M. Pacas — PROJECT ENGINEER — 41019 — R. C. E. NO. — 11/26/90 — DATE
JAMES M. MONTGOMERY CONSULTING ENGINEERS, INC. — 33699 — R. C. E. NO. — 11/26/90 — DATE

JMM James M. Montgomery Consulting Engineers, Inc. Pasadena, California

APPROVED — DATE
APPROVED — DATE

LAS VIRGENES MWD / TRIUNFO CSD
TAPIA WRF - REGIONAL FACILITIES EXPANSION IV
FILTRATION / DISINFECTION ADDITION

STANDARD DETAILS - 2

SHEET E-9 OF 110 SHEETS

JOB No. 870.0215 FILE No. LVX ELE:LVXE09.DGN

CABLE NO.	CONDUCTORS	CONDUIT NO.	CONDUIT SIZE	FUNCTION	FROM	TO	ROUTE	REMARKS
LB-3	2 #12	LB-3	3/4"	POWER	LIGHT PANEL 'LB'	HEAT TRACE		
C-8		C-8			LP-B			
MV-A1	3 #4/0	MCC-A1	4"		MCC-MV(COMP'T FOR 2-P-1)	TRANSFER SWITCH		5KV CLASS
MV-B1		MCC-B1			MCC-MV(COMP'T FOR 2-P-2)			
MV-AB		MCC-AB			MCC-MV(COMP'T FOR 2-P-7)			
SHEET E-3 4 C3	8 #14	C3	1"	CONTROL & SPACE HEATER	MCC-5M	FILTER INFLUENT PUMP 5-P-4		
C-50	(2) 2/C #16 SHLD.	C-50		SIGNAL	LEVEL TRANSMITTERS	LCB-3		
C-51	4 #14	C-51		CONTROL	MCC-1M	J-BOX (HEAT TRACE)	LOCATED AT PLATFORM OF STORAGE TANKS	
C-52	3#12, 1#12 GND. 2#14	C-52		POWER & CONTROL		UNIT HEATER G-ME-24		
C-53		C-53				UNIT HEATER G-ME-25		
C-54		C-54				UNIT HEATER G-ME-26		
C-55		C-55				UNIT HEATER G-ME-27		
C-56		C-56				EXHAUST FAN G-F-5		
C-57		C-57				EXHAUST FAN G-F-6		
C-60	(8)-2/C #16 SHLD.	C-60	2"	SIGNAL	LCB-2A	PULL BOX 9S		
C-61	(6)-2/C #16 SHLD.	C-61			LCB-1			
C-62	2/C #16 SHLD.	C-62	1"		LCB-3			
C-63		C-63			10-M-1			
C-64	4 #14	C-64		CONTROL	CONTROL PNL. FOR DRAINAGE PUMP STATION	LCB-1		
C-65	4 #12	C-65			EFFLUENT PUMP CONTROL	PULL BOX 9C		
C-66	12 #14	C-66			PULL BOX 11C	GATE #1		
C-67		C-67		SIGNAL	PULL BOX 11G	GATE #1 CONTROL PANEL		
C-68		C-68				GATE #1 OPERATOR		
C-69	TWISTED PAIR CABLES	C-69		CONTROL	Pull Box at Gate 2	GATE #1		
C-70	2 #14, 4 #14	C-70		POWER & CONTROL	J-BOX AT CHEMICAL BLDG.	IRRIGATION AUTO. CONTROL		
MCC-A1	3#1, 1#6 GND.	MCC-A1		POWER	MCC-A	CIRCUIT BREAKERS PANEL		
MCC-A1a	3#6, 1#10 GND	MCC-A1a	1 1/2"		CIRCUIT BREAKER PANEL	CONTROL PNL. FOR DRAINAGE PUMPS 11-P-1 & 11-P-2		
MCC-A1b	3#12, 1#12 GND.	MCC-A1b	1"			SULFUR DIOXIDE SYSTEM 2-MB-8		
MCC-A1c	3 #12, 1#12 GRD	MCC-A1c				GATE #1		
MCC-A1d		MCC-A1d				GATE #2		
MCC-A1e	3#12, 1#12 GND.	MCC-A1e				2-P-4		
LA-18/20	3#12, 1#12 GND.	LA-18/20		POWER	EXIST. PANEL LA	OPERATOR CONSOLE AT GATE #2		
LB-9	2 #12	LB-9			LIGHT PANEL 'LB'	IRRIGATION AUTO CONTROL		
C-71	10 #14	C-71		CONTROL	2-P-4 STARTER	LCB-1		
C-72	6 #10	C-72	1"	POWER	CONTROL PNL. FOR DRAIN PUMP STATION	BROOKS BLK AT PUMP STATION	UNDERGROUND - IN DUCT BANK	
C-73	10 #12	C-73	1"	POWER	GATE 2	GATE 1	" " "	
C-74	NONE	C-74	1"	SPARE	GATE 2	GATE 1	" " "	
C-75	NONE	C-75	1"	SPARE	GATE 2	GATE 1	" " "	
C-76	NONE	C-76	1"	SPARE	PB9S	PB13C	" " "	
C-77	NONE	C-77	2"	SPARE	PB9S	PB13C	" " "	
C-78	1-TWISTED PAIR CABLE	C-78	1"	CONTROL FOR OVERFLOW METER	METER AT EFFLUENT	MAU PNL		
C-79	1-TWISTED PAIR CABLE	C-79	1"	CONTROL FOR PERC POND METER	METER AT CHANNEL	MAU PNL		
C-80	1-C.O.	C-80	1"	SPARE	BROOKS J-BOX AT PUMP ST.	GROUND WATER METER		
C-81	NONE	C-81	1"	SPARE	Outside Sulfamator Rm	STORAGE TANKS South wall	DUCT BANK Y	
C-82	NONE	C-82	3/4"	SPARE	Outside Sulfamator Rm	Storage Tanks South wall	Duct Bank Y	

DUCT BANK SCHEDULE

DUCT SECTION	CONDUIT NUMBERS
U	C-6A C-7B C-66, C-67, C-68, C-69, LA-18/20
V	LB-3, C-50, C-51, C-C.O C-80, C-82
W	C-67, LA-18/20, MCC-A1c & MCC-A1d
Z	C-70
Y	C-6A, C-73, C-74, C-75
X	C-61, C-65, C-76, C-77

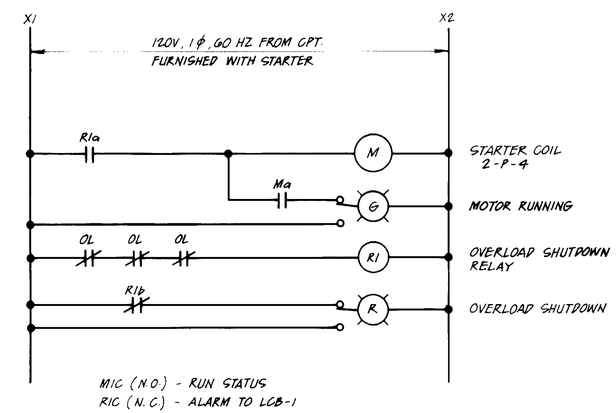

SAMPLE PUMP 2-P-4 STARTER

NOTE: NEW STARTER INSTALLED, BUT NOT CONNECTED. EXISTING UNIT REUSED.

04765

PROJECT-RECORD DOCUMENT
C.W. Roen Const Co.
P.O. 4, Danville, CA 94526
DATE: 3/3/94 By: BEL

REV	DATE	BY	DESCRIPTION

SCALE: NONE

WARNING: 0 1/2 1 — IF THIS BAR DOES NOT MEASURE 1" THEN DRAWING IS NOT TO SCALE.

DESIGNED / DRAWN / CHECKED

SUBMITTED: PROJECT ENGINEER — R.C.E. NO. 41019 — DATE 11/26/90

RECOMMENDED: JAMES M. MONTGOMERY, CONSULTING ENGINEERS, INC. — R.C.E. NO. 33699 — DATE 11/26/90

JMM James M. Montgomery Consulting Engineers, Inc. Pasadena, California

APPROVED — DATE

APPROVED — DATE

LAS VIRGENES MWD / TRUNFO CSD
TAPIA WRF - REGIONAL FACILITIES EXPANSION IV
FILTRATION / DISINFECTION ADDITION

CONDUIT AND DUCT BANK SCHEDULES

SHEET E-10 OF 110 SHEETS

REGISTERED PROFESSIONAL ENGINEER — No. 7345 — ELECTRICAL — STATE OF CALIFORNIA

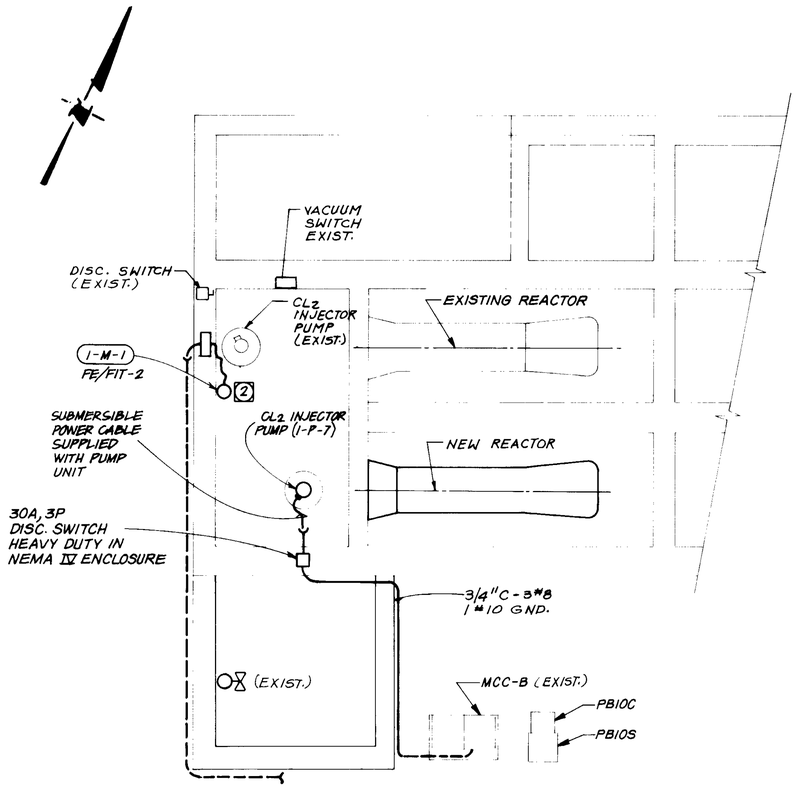

POWER PLAN

SCALE: 1/4"=1'-0"

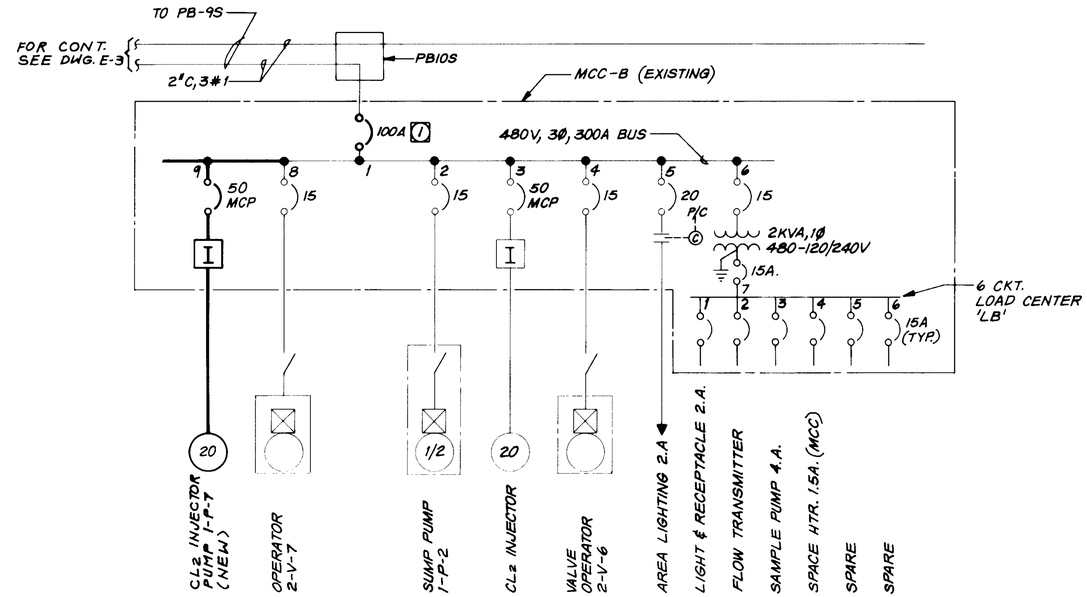

SINGLE LINE DIAGRAM

NOTES:

1. REPLACE EXISTING 50A CIRCUIT BREAKER WITH 100A CIRCUIT BREAKER.
2. DISCONNECT AND REMOVE EXISTING FLOWMETER INSTALL NEW FLOWMETER AND REUSE EXISTING WIRES TO CONNECT NEW METER.
3. DISCONNECT AND REWIRE AS SHOWN.
4. RECONNECT AS SHOWN ON BACK-UP CL_2 INJECTOR CONTROL
5. REMOVE EXISTING ON-OFF SWITCH AND REPLACE WITH DOUBLE CONTACT BLOCK AND WIRE AS SHOWN.

08-24-94 C.O'Neal

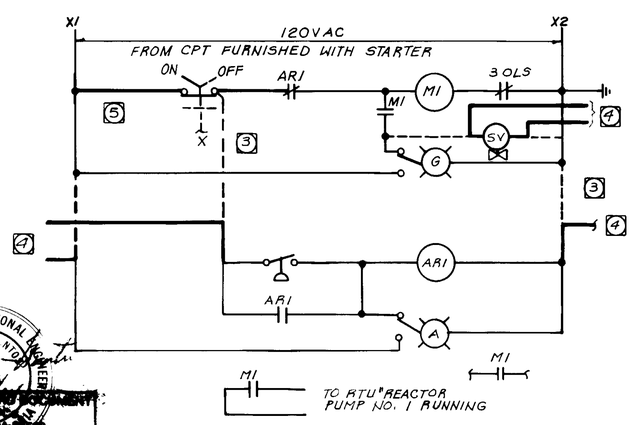

REACTOR PUMP NO. 1 (EXISTING)

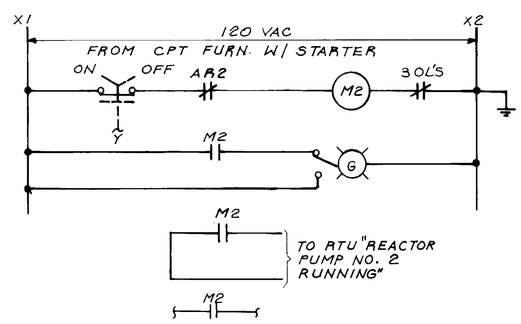

REACTOR PUMP NO. 2 (1-P-7)

(NEW)

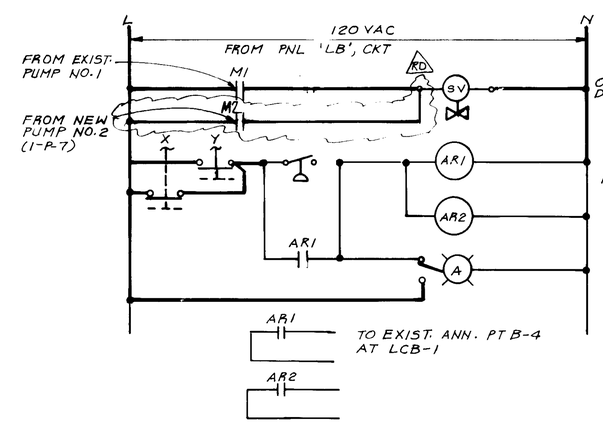

BACK-UP CL2 INJECTION CONTROL

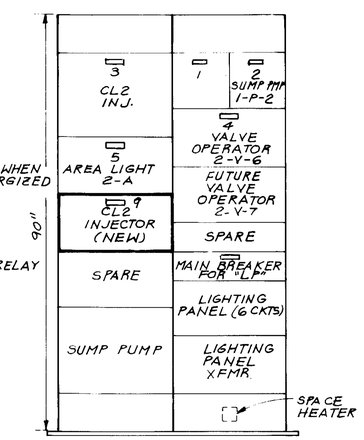

MCC-B

(EXIST.)

04766

PROJECT RECORD DOCUMENT
C.W. Hamm Const Co.
P.O. Box 2 Danville, CA 94526
DATE: 3/3/94 By: [illegible]

REGISTERED PROFESSIONAL ENGINEER
MARCOS R. S. NIO
No. 7345

PROJECT RECORD DOCUMENT
C.W. Hamm Const Co.
P.O. Box 2 Danville, CA 94526
DATE: [illegible] By: [illegible]

REV	DATE	BY	DESCRIPTION
2	3/17/94	MW	AS-BUILT DRAWING

SCALE: AS NOTED

WARNING: 0 1/2 1 — IF THIS BAR DOES NOT MEASURE 1" THEN DRAWING IS NOT TO SCALE.

DESIGNED [illegible]
DRAWN Byron Ellis
CHECKED [illegible]

SUBMITTED Jorge M. Pacon, PROJECO ENGINEER — 41019 R.C.E. NO. — 11/26/90 DATE
RECOMMENDED [illegible], JAMES M. MONTGOMERY CONSULTING ENGINEERS, INC. — 33699 R.C.E. NO. — 11/26/90 DATE

JMM James M. Montgomery Consulting Engineers, Inc. Pasadena, California

APPROVED [illegible] DATE
APPROVED [illegible] DATE

[illegible] ECTIC [illegible]
CHLORINE CONTACT TANK MODIFICATIONS

SHEET 1E-1 OF 110 SHEETS

JOB NO. 870.0215 FILE CC

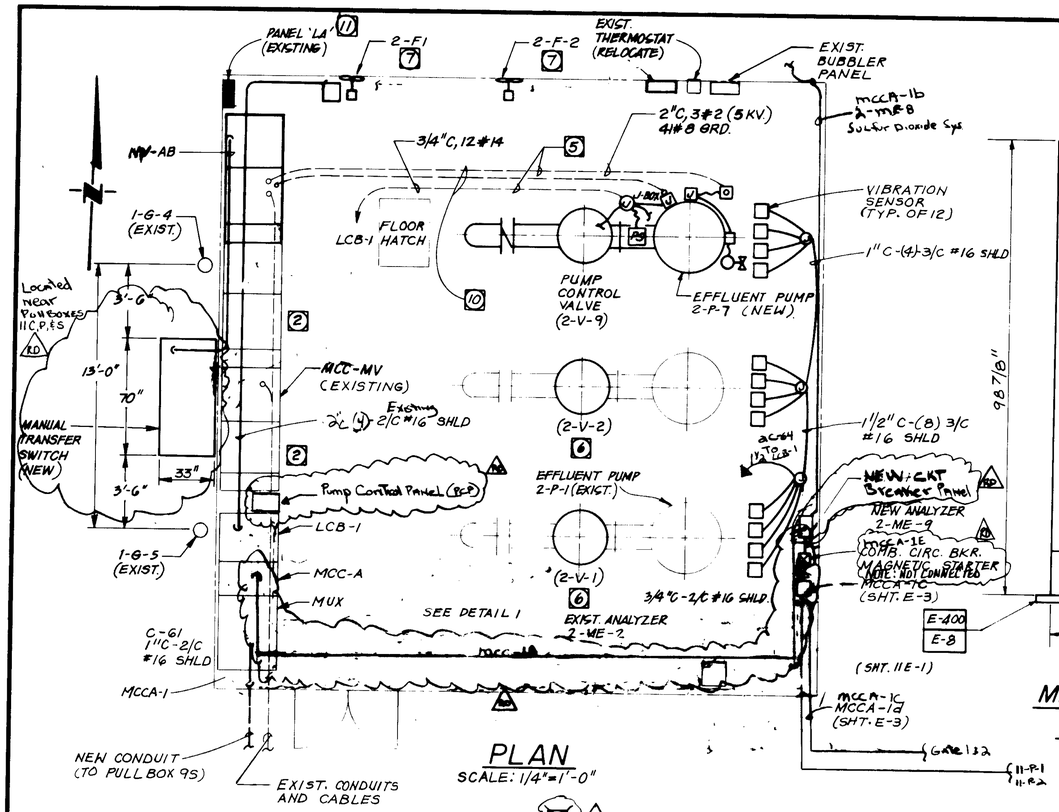

PLAN

SCALE: 1/4"=1'-0"

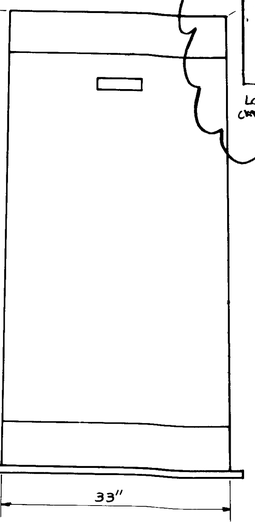

MANUAL TRANSFER SWITCH (NEW)

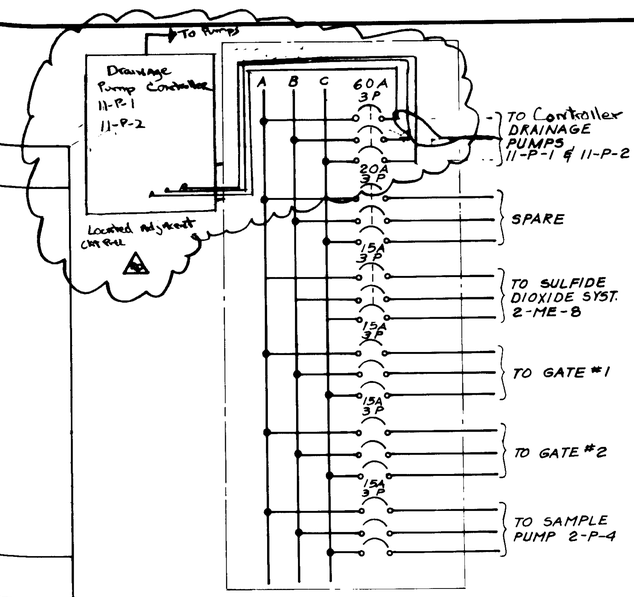

DETAIL 1
CIRCUIT BREAKER PANELBOARD

(MAIN LUGS ONLY) NEMA 1
26" H × 20" W × 5 3/4" D
480Y 3Ø

NOTES:

1. CONTRACTOR SHALL CLEAN ALL CONDUIT JOINTS LOCATED INSIDE WET WELL, AND SEAL THEM WITH HYSOL EPOXI-PATCH KIT IN ORDER TO PREVENT CORROSION.
2. ALL STUB-UPS SHALL BE SEALED.
3. SEE SPEC'S SEC. 16481, SECTION 2.8 FOR REPLACEMENT OF THE TWO EXISTING MEDIUM VOLTAGE MOTOR CONTROLLERS.
4. [illegible]
5. CONTRACTOR SHALL SEAL ALL CONDUIT TERMINATIONS/ STUB-UPS IN EXISTING AND NEW MOTOR CONTROL CENTERS AND RTU CABINETS.
6. CONTRACTOR SHALL DISCONNECT AND REMOVE EXIST. PUMP CONTROL VALVES AND RECONNECT FULLY OPERATIONAL NEW CONTROL VALVES.
7. DISCONNECT EXISTING EXHAUST FANS AND REUSE EXISTING WIRES TO CONNECT NEW EXHAUST FANS.
8. OUTDOOR TYPE ENCLOSURE WITH SCREENED AND FILTERED VENTILATION OPENING TO PREVENT ENTRY OF RODENTS AND CORROSIVE GASES. SEE SPECS. SECT. 16481
9. NEW LIT-7 BUBBLER PANEL. DERIVE POWER SUPPLY FROM EXISTING BUBBLER PANEL POWER SUPPLY. ROUTE NEW SIGNAL CONDUIT AND CABLE TO LCB-1.
10. CONDUITS ARE EXISTING. CONTRACTOR SHALL FURNISH AND INSTALL WIRES AS REQUIRED.
11. FOR CONTINUATION TO 2-ME-8 SEE SHT. 11E-1.
12. "CONTRACTOR SHALL PROVIDE HEAT TRACE AROUND 4 INCH DRAIN VALVE AND FOUR (4) TRY COCK VALVES IN EACH EXISTING AND NEW SURGE TANKS SHOWN IN SHEET 2M-1. CONTRACTOR SHALL DERIVE POWER FROM MCC-A, PANEL A. ADD CIRCUIT BREAKER AS REQUIRED. HEAT TRACE SHALL BE AS SPECIFIED IN SPECIFICATION SECTION 16850."

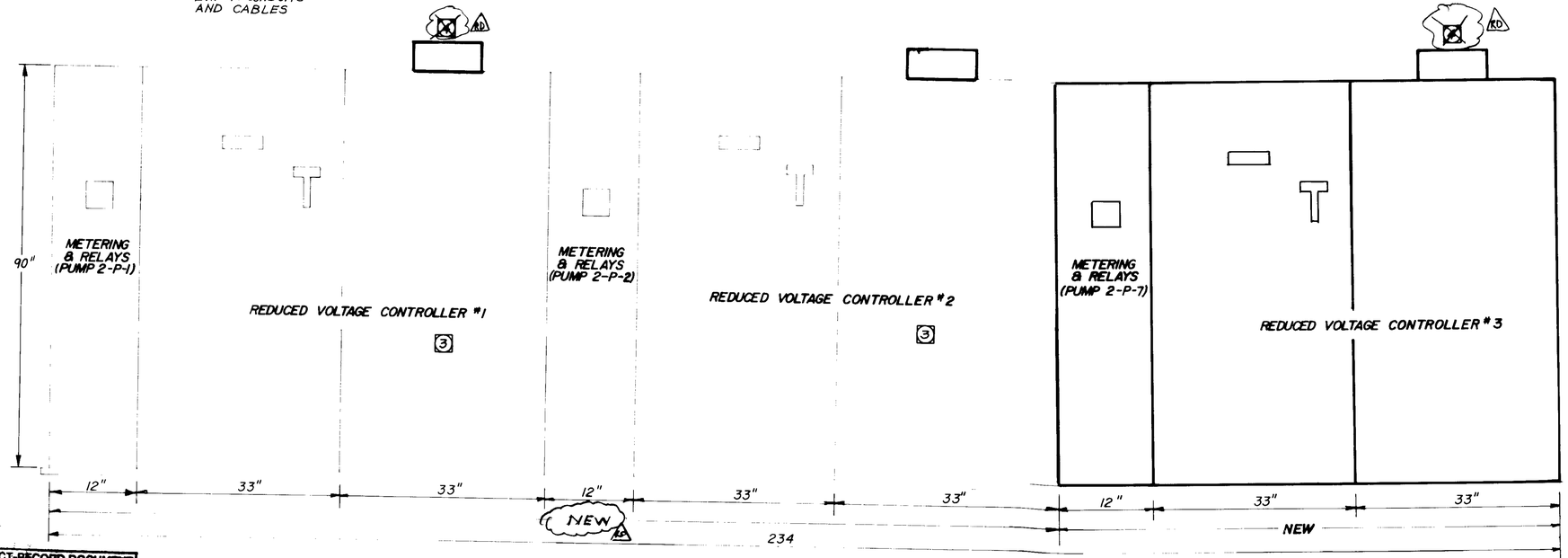

MCC-MV

N.T.S.

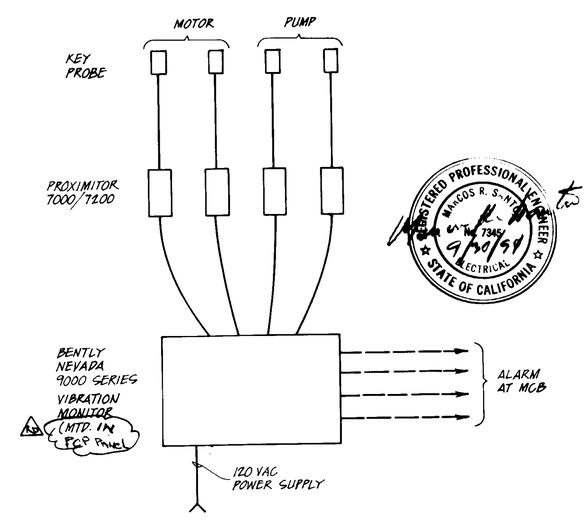

VIBRATION MONITOR BLOCK DIAGRAM

(TYPICAL OF 3)

REGISTERED PROFESSIONAL ENGINEER MARCOS R. SANTOS No. E 7345 ELECTRICAL STATE OF CALIFORNIA

04767

PROJECT-RECORD DOCUMENT
C.W. Roen Const. Co.
P.O. 4, Danville, CA 94526
DATE: 3/3/94 By: [illegible]

REV	DATE	BY	DESCRIPTION
3	11.9.94	BWC	AS BUILT
1	4.25.91	M.B.J.	AS BID

SCALE: AS SHOWN

WARNING: 0 1/2 1 — IF THIS BAR DOES NOT MEASURE 1" THEN DRAWING IS NOT TO SCALE.

DESIGNED [illegible]
DRAWN [illegible]
CHECKED [illegible]

SUBMITTED: George M. Lacon, PROJECT ENGINEER, R.C.E. NO. 41019, DATE 11/26/90
RECOMMENDED: [illegible], JAMES M. MONTGOMERY CONSULTING ENGINEERS, INC., R.C.E. NO. 33699, DATE 11/26/90

James M. Montgomery Consulting Engineers, Inc.
Pasadena, California

APPROVED [illegible] DATE
APPROVED [illegible] DATE

LAS VIRGENES MWD / TRIUNFO CSD
TAPIA WRF - REGIONAL FACILITIES EXPANSION IV
FILTRATION / DISINFECTION ADDITION
EFFLUENT PUMP STATION
POWER, CONTROL PLAN & EQUIPMENT ELEVATIONS

SHEET 2E-1 OF 110 SHEETS

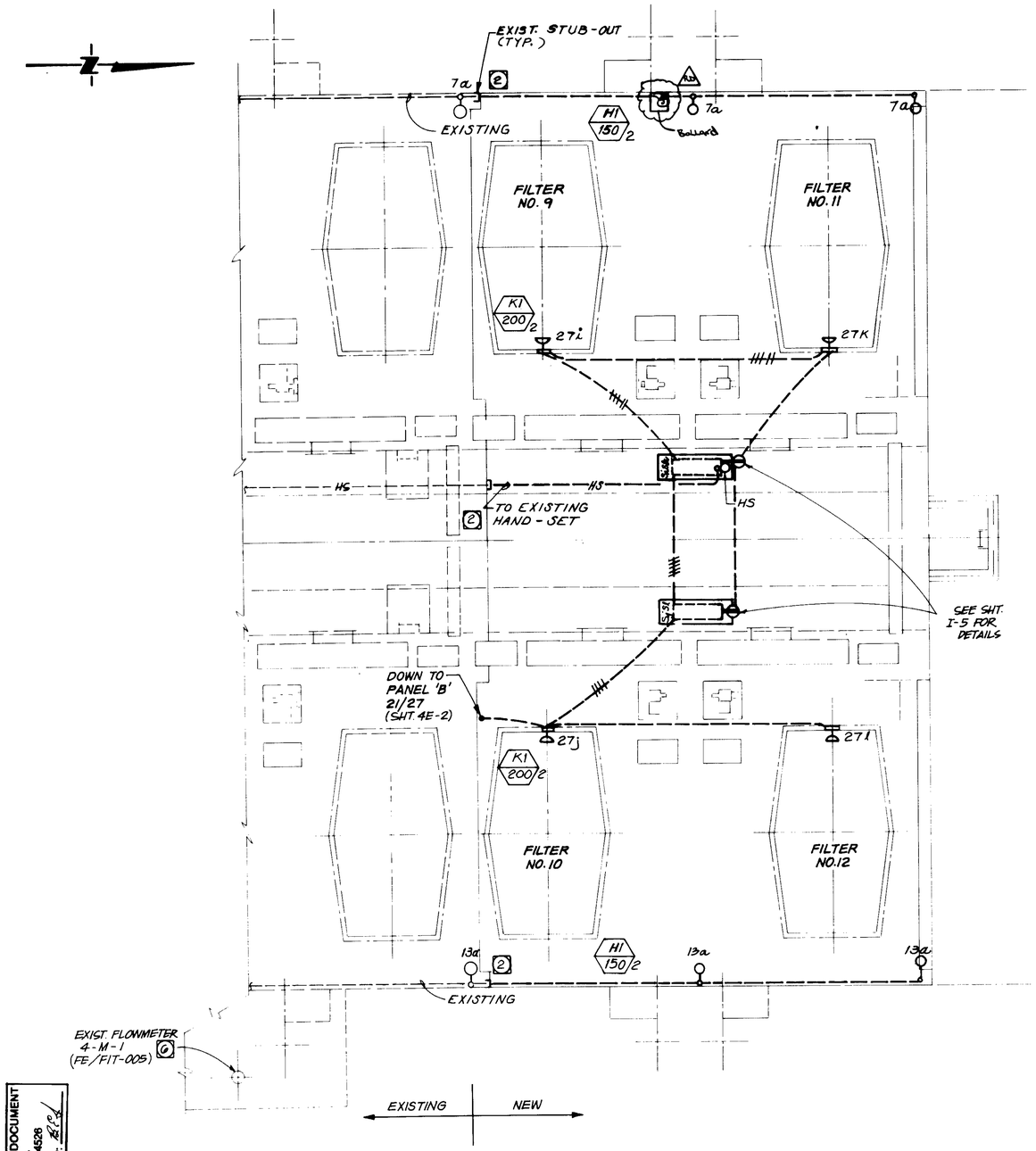

UPPER LEVEL LIGHTING AND RECEPTACLE PLAN

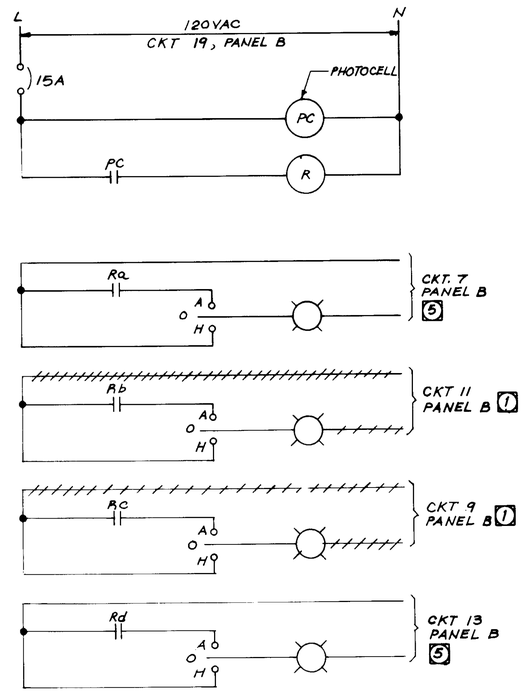

FILTER LIGHTING CONTROL
(EXISTING)

NOTES:

1. REMOVE EXISTING WIRES FOR CKT'S 9 & 11 FROM LIGHTING CONTROL PANEL LOC. IN MCC-3M IN FILTER GALLERY AS SHOWN ON THIS DRAWING. SEE NOTE 1 ON DWG. 4E-7.
2. CONTRACTOR SHALL USE EXISTING STUB-UPS WHEN WIRING THE LIGHTING FIXTURES, HAND-SET & RECEPTACLES.
3. FEATURES SHOWN WITH LIGHT LINES ARE EXISTING.
4. FEATURES SHOWN WITH DARK LINES TO BE ADDED.
5. NEW LIGHTING FIXTURES WERE ADDED TO EXISTING CIRCUITS 7 & 13, AS SHOWN ON THIS DWG. AND ON FIXTURE SCHEDULE (PANEL 'B') ON DWG. 4E-7.
6. DISCONNECT AND REMOVE EXISTING FLOWMETER. INSTALL NEW FLOWMETER AND CONNECT USING EXISTING WIRES.

04768

PROJECT-RECORD DOCUMENT
C.W. Roen Const Co.
P.O. 4, Danville, CA 94526
DATE: 3/3/97 By: [illegible]

07-24-94 [illegible]

REGISTERED PROFESSIONAL ENGINEER
MARCOS R. S. ATIENZA
No. 7348
ELECTRICAL
STATE OF CALIFORNIA

REV	DATE	BY	DESCRIPTION
1	1-97	[illegible]	As-Builts

SCALE: 3/16" = 1'-0"

WARNING: 0 1/2 1 — IF THIS BAR DOES NOT MEASURE 1" THEN DRAWING IS NOT TO SCALE.

DESIGNED [illegible]
DRAWN [illegible]
CHECKED [illegible]

SUBMITTED: [illegible] PROJECT ENGINEER — 41019 R.C.E. NO. — 11/26/90 DATE
RECOMMENDED: [illegible] JAMES M. MONTGOMERY CONSULTING ENGINEERS, INC. — 33699 R.C.E. NO. — 11/26/90 DATE

James M. Montgomery
Consulting Engineers, Inc.
Pasadena, California

APPROVED: DISTRICT APPROVAL — DATE
APPROVED: — DATE

LAS VIRGENES MWD / TRUNFO CSD
TAPIA WRF - REGIONAL FACILITIES EXPANSION IV
FILTRATION / DISINFECTION ADDITION
[redacted]

SHEET 4E-1 OF 110 SHEETS

JOB NO. 870.0215 FILE ____ CC ____

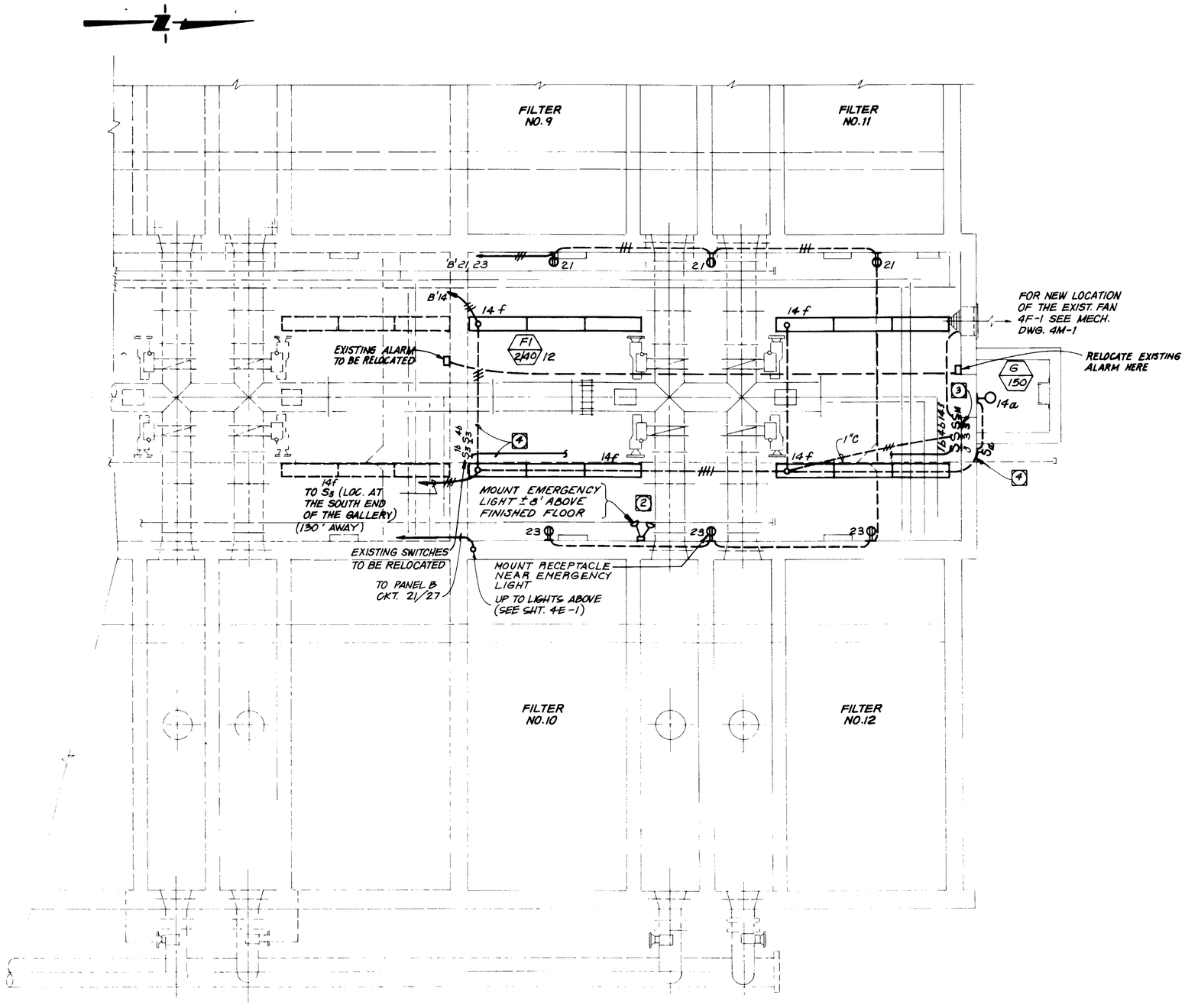

NOTES:

1. MOUNT ALL RECEPTACLES SHOWN ON THIS SHEET AT 3'-0" FROM FINISHED FLOOR.

2. SELF CONTAINED EMERGENCY LIGHT, NICKEL CADMIUM BATTERIES, TWO 6-VOLT SEALED BEAM-HEADS, TWO RATE CHARGER, VOLTMETER TEST SWITCH WITH MOUNTING SHELF AND CONDUIT BOX.

3. A 3 WAY SWITCH FOR THE NEW LIGHTS (CIRCUIT 14) SHALL BE LOCATED AT THE SOUTH END OF THE GALLERY NEXT TO THE EXISTING 3 WAY SWITCHES.

4. RELOCATE THE EXISTING 3 WAY SWITCHES (CKT. 1 & 4), & EXHAUST FAN SWITCH AND EXTEND CONDUITS TO THE NEW LOCATION OF THE SWITCHES AS SHOWN ON THE DRAWING.

04769

REGISTERED PROFESSIONAL ENGINEER MARCOS R. SANTOS No. 7846 ELECTRICAL STATE OF CALIFORNIA

PROJECT-RECORD DOCUMENT
C.W. Roen Const Co.
P.O. 4, Danville, CA 94526
DATE: 3/3/94 By: BEd

LOWER LEVEL LIGHTING AND RECEPTACLE PLAN

AS-BUILT RECORD DRAWING
THIS DRAWING IS BASED ON INFORMATION PROVIDED BY OTHERS. AS-BUILT INFORMATION MAY OR MAY NOT BE VERIFIED ONLY THAT THE INFORMATION FURNISHED BY OTHERS HAS BEEN ACCURATELY TRANSFERRED. THE USER OF THIS DRAWING IS RELYING ON THESE RECORDS AT HIS OWN RISK. INDEPENDENT VERIFICATION OF THE INFORMATION IS THE USER'S RESPONSIBILITY.
DATE 08-24-94 BY [illegible] JERGEN KREITZBERG

REV	DATE	BY	DESCRIPTION

SCALE: 1/4" = 1'-0"

WARNING: 0 1/2 1 — IF THIS BAR DOES NOT MEASURE 1" THEN DRAWING IS NOT TO SCALE.

DESIGNED [illegible]
DRAWN [illegible]
CHECKED [illegible]

SUBMITTED: George M. Racan — PROJECT ENGINEER — R.C.E. NO. 41019 — DATE 11/20/90
RECOMMENDED: [illegible] — JAMES M. MONTGOMERY CONSULTING ENGINEERS, INC. — R.C.E. NO. 33699 — DATE 11/20/90

James M. Montgomery
Consulting Engineers, Inc.
Pasadena, California

APPROVED: DISTRICT APPROVAL — DATE
APPROVED — DATE

LAS VIRGENES MWD / TRIUNFO CSD
TAPIA WRF - REGIONAL FACILITIES EXPANSION IV
FILTRATION / DISINFECTION ADDITION
FILTERS - LOWER LEVEL
LIGHTING AND RECEPTACLES

SHEET 4E-2 OF 210 SHEETS

FILE ____ CC ____ JOB NO. ____

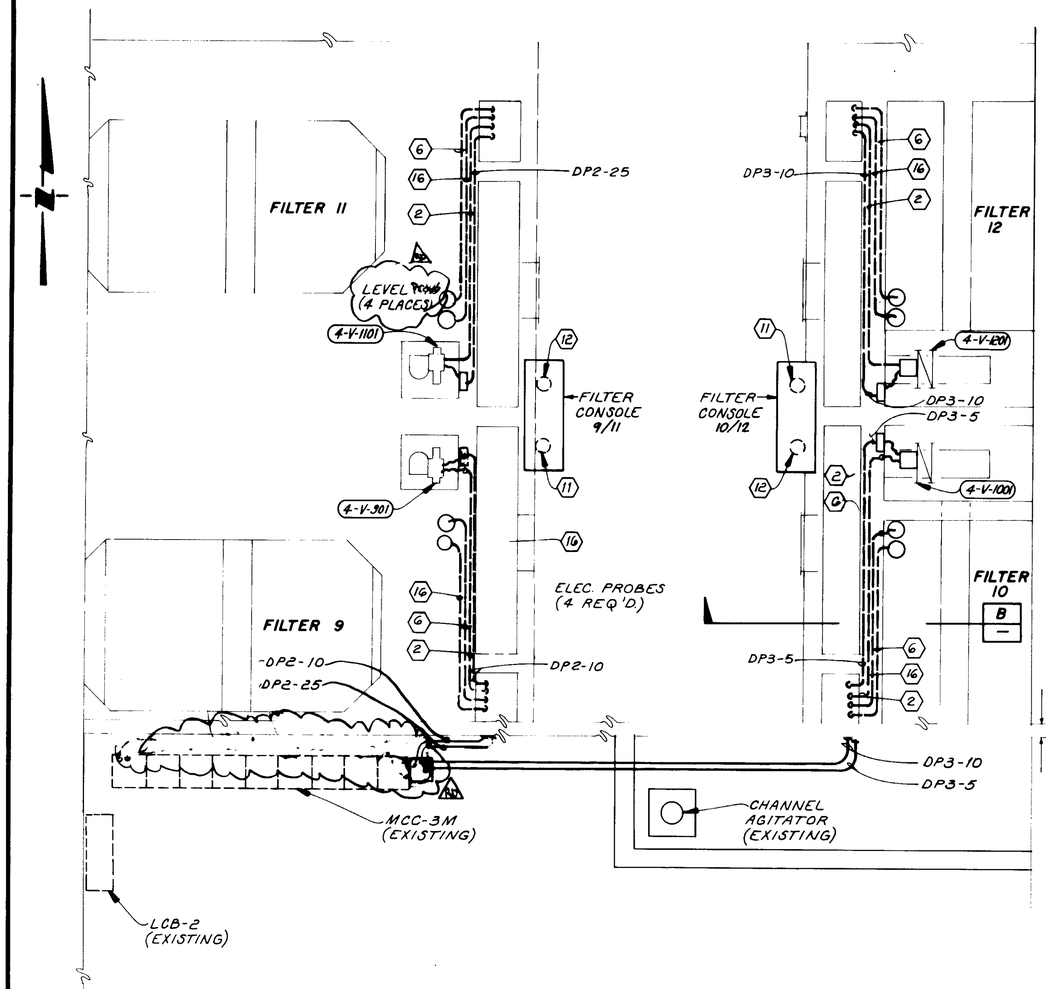

PLAN

SCALE: 1/4"=1'-0"

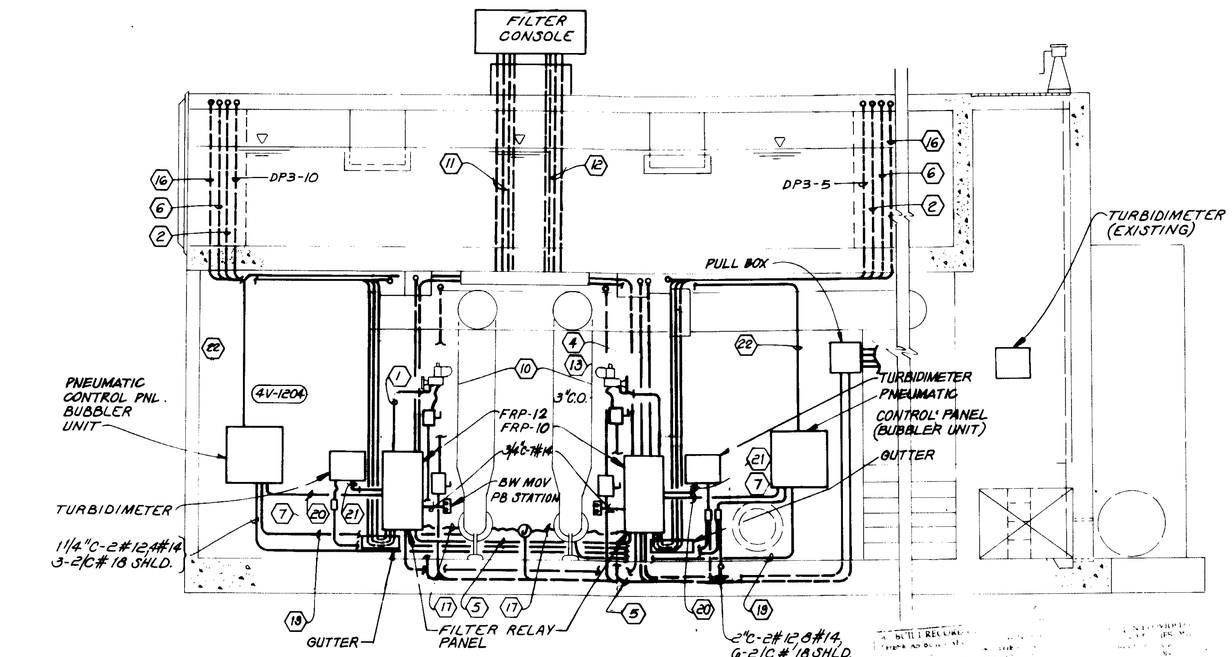

SECTION A

SCALE: 1/4"=1'-0" 4E-4

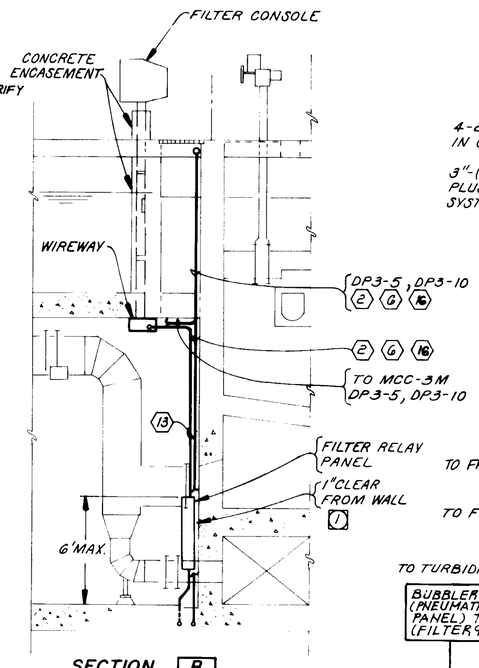

SECTION B

SCALE: 1/4"=1'-0"

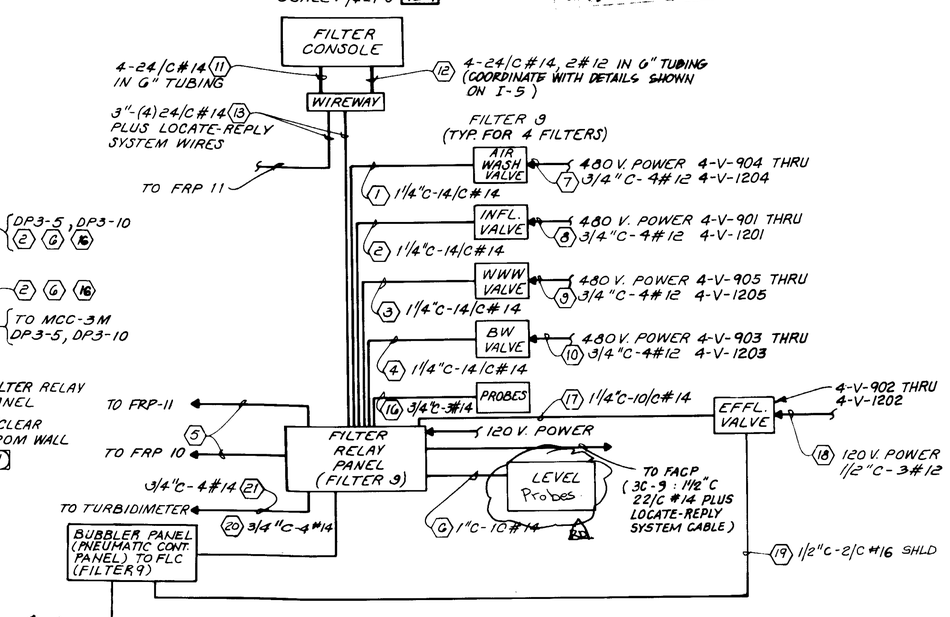

FILTER CONTROL BLOCK DIAGRAM

04770

NOTES:

1. ALL PANELS, DISCONNECT SWITCHES, PUSHBUTTONS, INSTRUMENTS, ETC. MOUNTED ON FILTER PIPE GALLERY WALLS, SHALL BE MOUNTED WITH 1" AIR SPACE FROM WALL.
2. ALL CONDUITS ROUTED AT CEILING AND ON WATER BEARING WALLS SHALL BE TERMINATED AT BOTTOM OF PANELS INSTEAD OF THE TOP.

REGISTERED PROFESSIONAL ENGINEER — Marcos R. S. Niño — No. 7345 — ELECTRICAL — 9/20/94 — STATE OF CALIFORNIA

PROJECT RECORD DOCUMENT
C.W Roen Const Co.
P.O. 4, Danville, CA 94526
DATE: 3/3/94 By: BCL

REV	DATE	BY	DESCRIPTION
A	1-94	BLK	AS-BUILTS

SCALE: AS NOTED

WARNING: 0 1/2 1 — IF THIS BAR DOES NOT MEASURE 1" THEN DRAWING IS NOT TO SCALE.

DESIGNED Benjamin Walter
DRAWN Emma Glover
CHECKED M. Santos

SUBMITTED Donald M. Racer — PROJECT ENGINEER — 41019 R.C.E. NO. — 11/26/90 DATE
RECOMMENDED — JAMES M. MONTGOMERY CONSULTING ENGINEERS, INC. — 33699 R.C.E. NO. — 11/26/90 DATE

James M. Montgomery Consulting Engineers, Inc. — Pasadena, California

APPROVED — DATE
APPROVED — DATE

LAS VIRGENES MWD / TRIUNFO CSD
TAPIA WRF - REGIONAL FACILITIES EXPANSION IV
FILTRATION / DISINFECTION ADDITION
[redacted]

SHEET [redacted] OF [redacted] SHEETS